SPLIT HEAT PUMP

2½-4 TON A-COILS

FOR USE WITH:

OIL
GAS
ELECTRIC

1976 04

FURNACES

BARD MANUFACTURING CO. • BRYAN, OHIO 43506
Dependable quality home equipment . . . since 1914

MANUAL 2100-005

INSTALLATION INSTRUCTIONS

REMOTE HEAT PUMP A-COIL

GENERAL

The Bard heat pump A-coils are coil only sections designed for use with matching Bard outdoor heat pump sections. The selection of the matching outdoor unit should be determined based on the cooling capacity required for the application, as is standard practice when sizing a heat pump system. Refer to specification sheets for matching combinations and ratings.

The heat pump A-coil was primarily designed to be used with Bard EFC Series electric furnace for counterflow applications. It can also be utilized as an add-on heat pump system to existing electric furnace installations to reduce operating costs.

Another increasingly popular concept is to use a heat pump system in conjunction with natural gas, manufactured gas, or fuel oil furnaces. The theme here is to take advantage of the heat pump efficiency during the large number of days when the outdoor temperature is in the mid 40° range or higher, and heating is required as dictated by the indoor wall thermostat. The fossil fuel furnaces are tremendously oversized for the 40° and higher outdoor temperature conditions, and utilization of the heat pump during this temperature range provides a very practical and economical heating system, while also offering the advantages of cooling operation during the summer months.

Each of the above applications demands special installation and control circuit wiring considerations, which are covered in detail for each specific application in the following paragraphs.

AIRFLOW

The heat pump A-coil is designed for three mounting positions with respect to airflow—upflow, downflow, and horizontal. The coil is equipped with a dual condensate collector which permits one A-coil assembly to meet these three mounting positions, and no accessory parts are required. The three positions and the correct airflow direction for each are shown in the following illustrations:

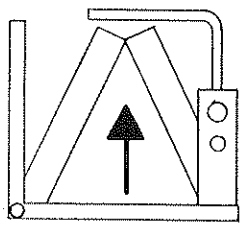

Upflow

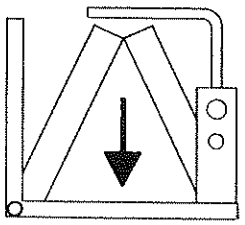

Downflow

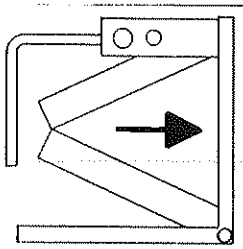

Horizontal

The airflow rating, in terms of cfm (cubic feet of air per minute) and static pressure drop based upon cfm, is shown on the specification sheet. The correct airflow as determined by matching outdoor section should be adhered to as closely as possible to assure proper operation and performance from the heat pump system.

CONDENSATE DRAIN

A single 3/4 inch FPT drain connection is supplied on the dual condensate collector which is used for all positions.

OPTIONAL HP3 PLENUM (For H3AQ Only)

The HP3 plenum is designed to match with the Bard EFC Series electric furnace. The dimensions of the plenum are shown on the H3AQ specification sheet. There are 3/4 inch duct flanges on both the top and bottom of the plenum which permit the plenum to be used on top of an inverted EFC furnace for downflow application, or below an EFC furnace for upflow application.

The HP3 plenum and H3AQ coil can also be used together for any other application, as it has duct connection flanges on each end and existing duct work can be adapted.

If desired, the H3AQ can be used less plenum. Care must be exercised in mounting of the coil to assure that there is a minimum of air by-pass around the coil condensate pan.

OPTIONAL FR3 FILTER RACK (For H3AQ Only)

Available for and matches with the HP3 plenum. Provides for filtering of the air prior to it entering the coil section. This filter rack or some other means of air filtering are required on any application where the H3AQ might be installed upstream from the existing filter arrangement, specifically electric furnace applications where the H3AQ must be installed on the return air side of the furnace.

H4AQ INSTALLATION

At the present time, an optional plenum and filter rack are not available for the H4AQ. The same precautions must be followed for the H4AQ as are outlined for the H3AQ when the optional plenum and filter rack are not used.

ELECTRIC FURNACE APPLICATION

The heat pump A-coil must be installed on the return air side of any electric furnace application. This is mandatory so that the heat output from the electric strip heaters, energized at the lower outdoor temperatures, does not drive into the heat pump coil and cause the refrigerant condensing pressure and temperature to raise to points well beyond the design limitations of a heat pump system, and cause the compressor to be de-energized by the manual reset high pressure switch.

CONTROL CIRCUIT WIRING

Each different Kw size EFC electric furnace requires some variations in wiring, because of the different amount of sequencer controls in the EFC. Listed below are the appropriate control circuit wiring diagrams based upon EFC size, and also the number of field installed A-22 thermostats, Bard Part No. 8408-001, required for each application:

Model	Control Circuit Diagram	Quantity of A-22's
EFC15	EF-1	1
EFC20	EF-2	2
EFC25	EF-3	2
EFC30	EF-4	2

This circuitry provides for compressor cut-off at a minimum outdoor temperature of at least 10°F. It also allows a maximum of 15Kw to be energized on the 2nd stage (W2) of the wall thermostat, any installed Kw over that amount being controlled by an A-22 acting as 3rd stage heat thermostat.

If this 3rd stage heat feature is not required or desired, do not remove the jumper between W1 and W2 on the EFC 24V terminal board and eliminate the A-22 and the wires shown connected to 24V terminals Y, F, and W2 as shown on control circuit diagrams EF-2, EF-3, and EF-4. All of the installed Kw will then sequence on when the 2nd stage (W2) of the wall thermostat is energized.

NOTE: On models not containing a factory installed emergency heat relay, there are no terminals E or F provided and wire nuts must be used.

Where warmer climatic conditions do not require a compressor cut-off, disregard the compressor cut-off wiring and DO NOT remove the factory wire between the changeover relay coil and the compressor contactor coil.

GAS OR OIL FURNACE APPLICATION

Application of heat pump coil only sections to fossil fuel furnaces require certain special considerations. The first is that return air applications are generally termed unacceptable because of: a) Local codes do not permit, b) may void heat exchanger warranty of furnace manufacturer, and c) past experience with return air applications generally very poor.

If we were concerned with heating cycle only, the reasons stated above would present no problems. However, during the cooling cycle the heat exchanger becomes chilled or cooled well below surrounding space temperatures due to the low air temperature coming off of the coil, and induces condensation to form on the heat exchanger.

As we consider placing the coil on the more traditional outlet (or leaving) air side of the furnace, we are faced with a new set of circumstances which must be considered.

BALANCE POINT

The first and most important is that while the heat pump can supply all the required heating capacity from the middle 40° and higher outdoor temperature range for most applications, it will fall short of heating capacity as the outdoor temperature drops off. The point at which the heat pump output capacity and the heat loss from the building are equal is called the "balance point." As the temperature drops, the output from the heat pump drops while at the same time the heat loss from the building increases. We must therefore provide a means of activating the furnace itself which has sufficient capacity to totally heat the building even under the most extreme outside temperature.

As the heat exchanger heats up, the air temperature entering the coil section will rise very rapidly, making it impossible to operate the heat pump any longer because of the extremely high refrigerant condensing pressure and temperature. We must therefore provide the necessary control circuitry to prevent this from happening.

BREAKEVEN POINT

Another factor to be considered is one of economics. There is a "breakeven point" which could be calculated for all situations, based on actual values of gas or oil cost per unit, electric rates, published Btu and power consumption data of the heat pump system, and estimated efficiency of the furnace involved. To operate the heat pump at outdoor temperatures below this "breakeven point" would result in a higher operating cost for that amount of Btu being supplied by the heat pump. Many sample calculations on typical buildings and using fuel costs now being experienced around the country reveal that the "breakeven point" invariably figures out to be in the 40°-50°F outdoor temperature range.

DEFROST

A final consideration is that heat pumps operating during outdoor temperatures from the low 40°F range and colder will gradually accumulate a frost buildup on the outdoor coil. A defrost cycle circuit will periodically and automatically clear the outdoor coil of this frost accumulation. This is accomplished by the heat pump system temporarily reverting back to the cooling cycle, using the hot refrigerant gas flowing through the outdoor coil to melt the frost. The outdoor fan motor also stops during this period to speed up the process. During this time of defrost cycle operation, there will be a cooling effect taking place at the indoor coil section, the same as would occur during the summer cooling system. Normal procedure would be to energize the supplemental heating system, in this case the fossil fuel furnace. The problem that arises here is that the high Btu output from the furnace being forced into the coil section will create a very high "superheated" compressor cycling.

CONCLUSION

A. Place the heat pump A-coil on the outlet (supply) air side of the furnace.

B. Since the "balance point," "breakeven point," and "defrost cycle" generally coincide at approximately 40° outside temperature, the changeover point between heat pump and fossil fuel should be at 45°F outside temperature.

C. The 8408-001, A-22 outdoor thermostat must be set at 45°.

D. Use FF-1 control circuit diagram for 30HPQ2 or 36HPQ2 and H3AQ. Required parts are:

Bard Part No.	Description
8408-001	A-22 Outdoor Thermostat
8201-008	Relay (84-20102-106)
8201-007	Fan Center (R8239C1009)

If being used with gas furnace built for air conditioning, a fan center is factory installed on furnace and Part No. 8201-007 is not required.

E. Use FF-2 control circuit diagram for 48HPQ1 and H4AQ. Required parts are:

Bard Part No.	Description
8408-001	A-22 Outdoor Thermostat
8201-008	Relay (84-20102-106)
8201-014	Relay (184-20114-406)

If being used with gas furnace built for air conditioning, install emergency heat relay (8201-014) per diagram FF-2, and wire remainder of control circuit per diagram FF-1.

WALL THERMOSTAT

The following thermostat and sub-base should be used for either electric furnace or fossil fuel furnace application of the heat pump A-coil:

Bard Part No.	Description
8403-004	T872C1004 Thermostat
8404-001	Q672F1026 Sub-base

FIELD INSTALLATION OF EMERGENCY HEAT RELAY

The installation instructions for the indoor heat pump coil sections have been written to correspond to outdoor heat pump units which contain an emergency heat relay installed at the factory. The purpose of this supplement is to illustrate how the "Emergency Heat Relay," Bard Part No. 8201-001, can be easily installed on any outdoor heat pump unit that does not contain a factory installed emergency heat relay, namely 48HPQ1 and 60HPQ2.

The following diagram and instructions should simplify the field installation of the emergency heat relay:

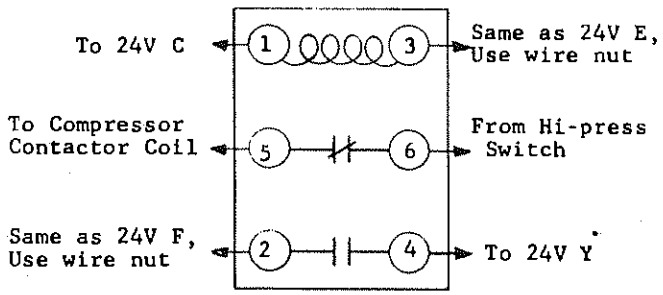

1. Mount relay in control panel.
2. The only factory wiring which must be changed is that the wire from the high pressure switch must be connected through the normally closed contacts 5 and 6 on emergency heat relay as shown.
3. Connect wires from the other 4 terminal posts as indicated.

Now that the emergency heat relay is wired into the outdoor heat pump control panel, the appropriate control circuit wiring diagram contained in the indoor heat pump coil section can be followed.

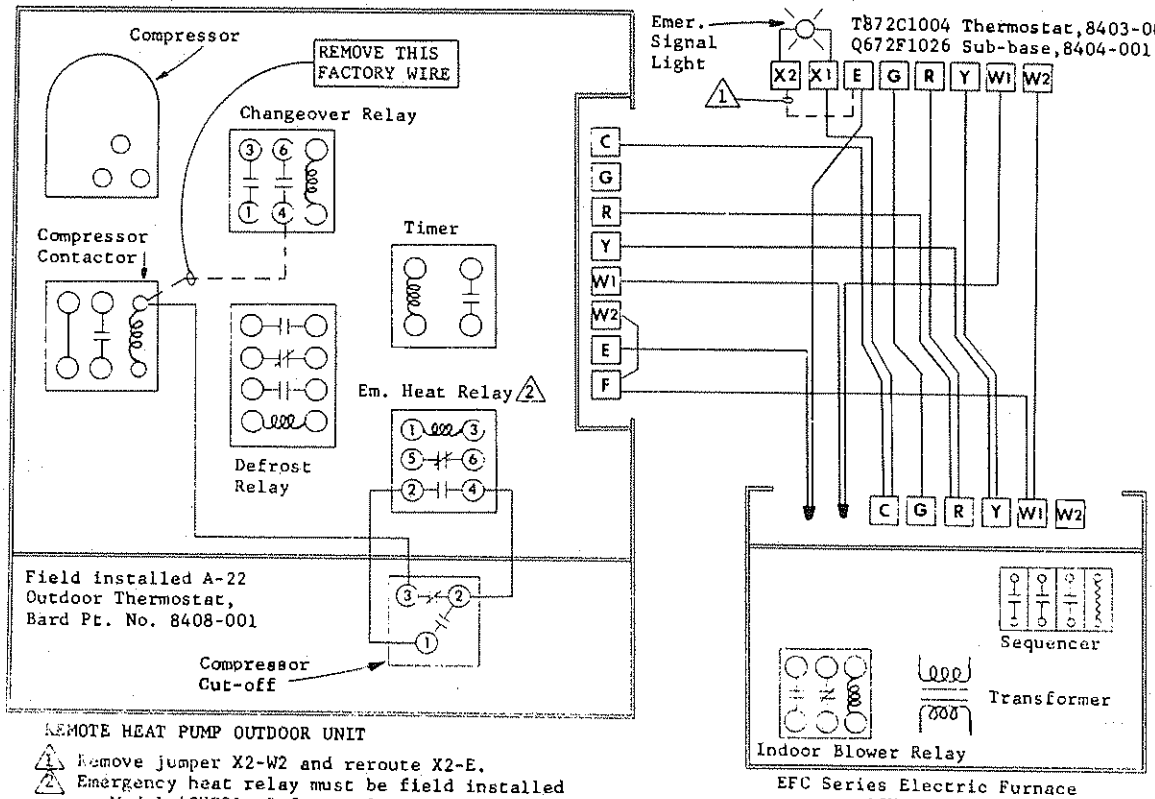

REMOTE HEAT PUMP OUTDOOR UNIT

1. Remove jumper X2-W2 and reroute X2-E.
2. Emergency heat relay must be field installed on Model 48HPQ1. Refer to Supplement headed "FIELD INSTALLATION OF EMERGENCY HEAT RELAY".

REMOTE HEAT PUMP CONTROL CIRCUIT WIRING WITH EFC15 ELECTRIC FURNACE AND HEAT PUMP A-COIL EF-1

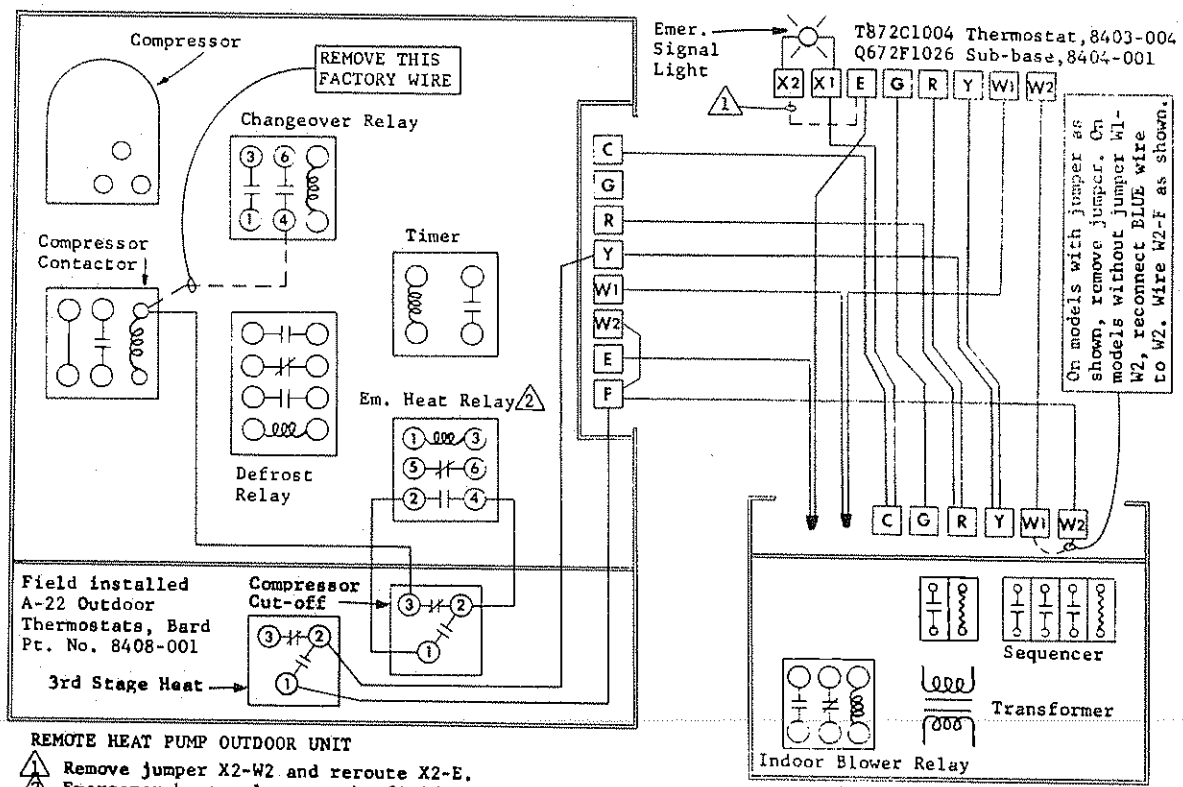

REMOTE HEAT PUMP OUTDOOR UNIT

1. Remove jumper X2-W2 and reroute X2-E.
2. Emergency heat relay must be field installed on Model 48HPQ1. Refer to Supplement headed "FIELD INSTALLATION OF EMERGENCY HEAT RELAY".

REMOTE HEAT PUMP CONTROL CIRCUIT WIRING WITH EFC20 ELECTRIC FURNACE AND HEAT PUMP A-COIL EF-2

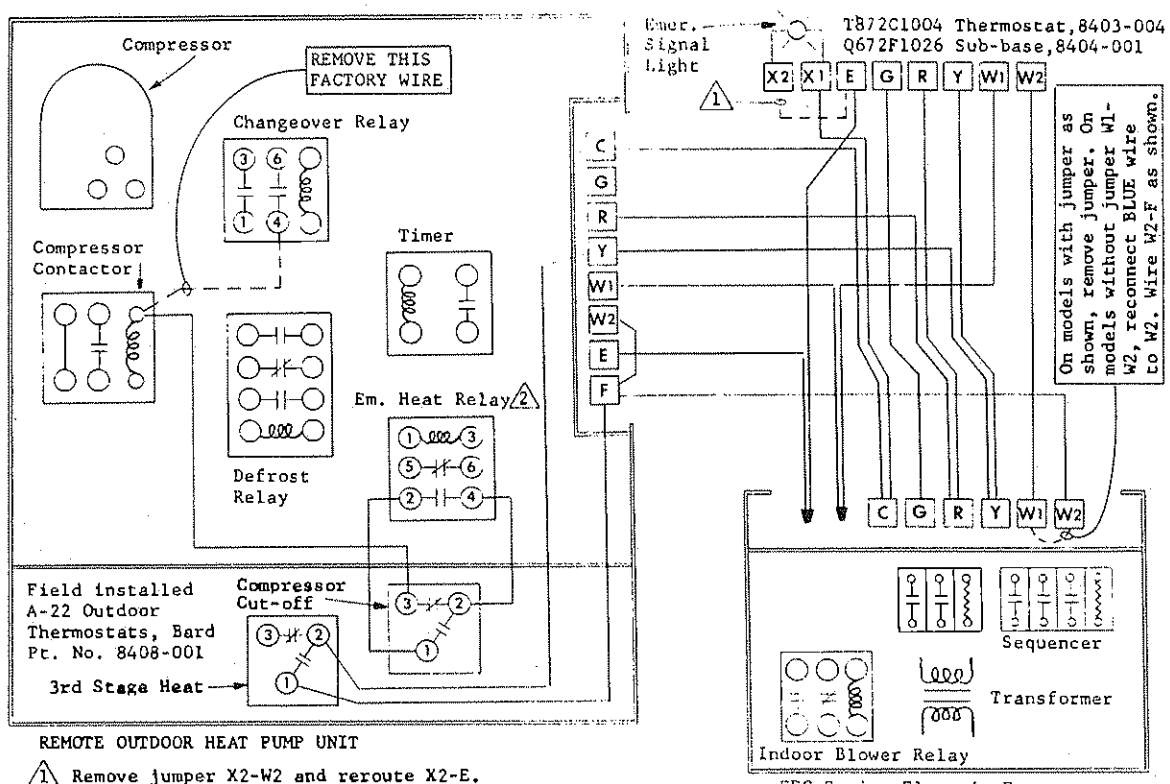

1. Remove jumper X2-W2 and reroute X2-E.
2. Emergency heat relay must be field installed on Model 48HPQ1. Refer to Supplement headed "FIELD INSTALLATION OF EMERGENCY HEAT RELAY".

REMOTE HEAT PUMP CONTROL CIRCUIT WIRING WITH EFC25 ELECTRIC FURNACE AND HEAT PUMP A-COIL EF-3

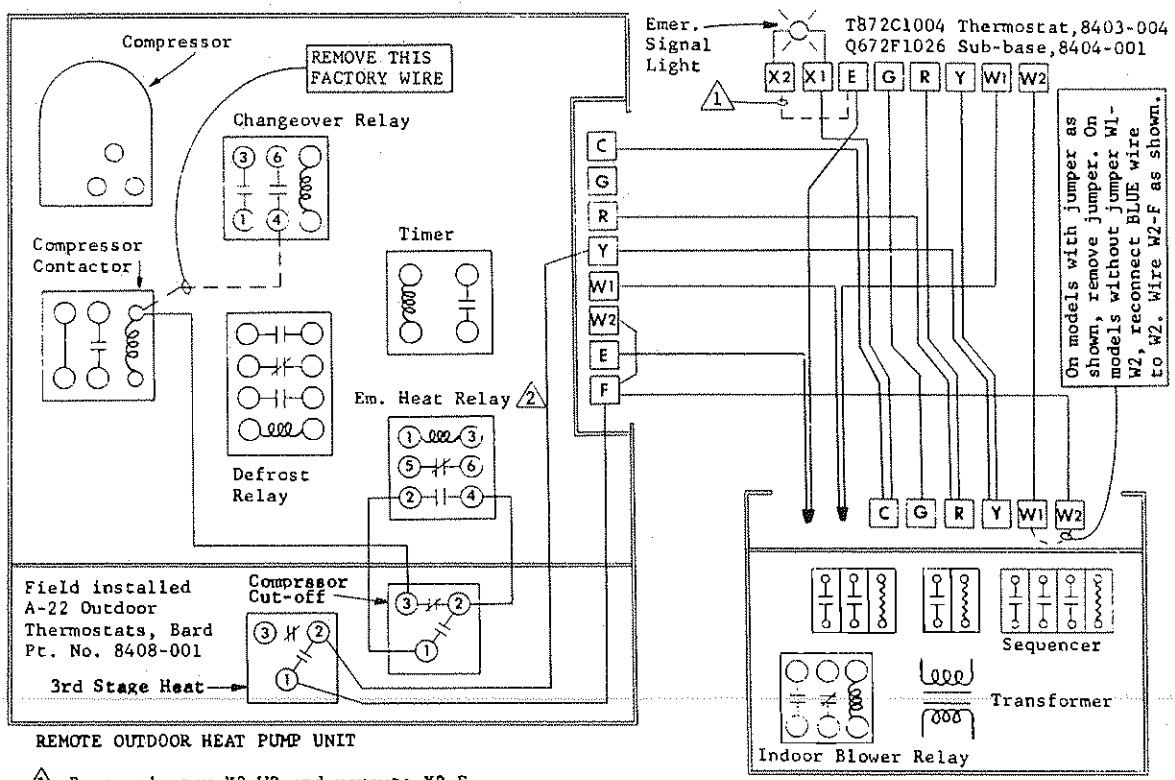

1. Remove jumper X2-W2 and reroute X2-E.
2. Emergency heat relay must be field installed on Model 48HPQ1. Refer to Supplement headed "FIELD INSTALLATION OF EMERGENCY HEAT RELAY".

REMOTE HEAT PUMP CONTROL CIRCUIT WIRING WITH EFC30 ELECTRIC FURNACE AND HEAT PUMP A-COIL EF-4

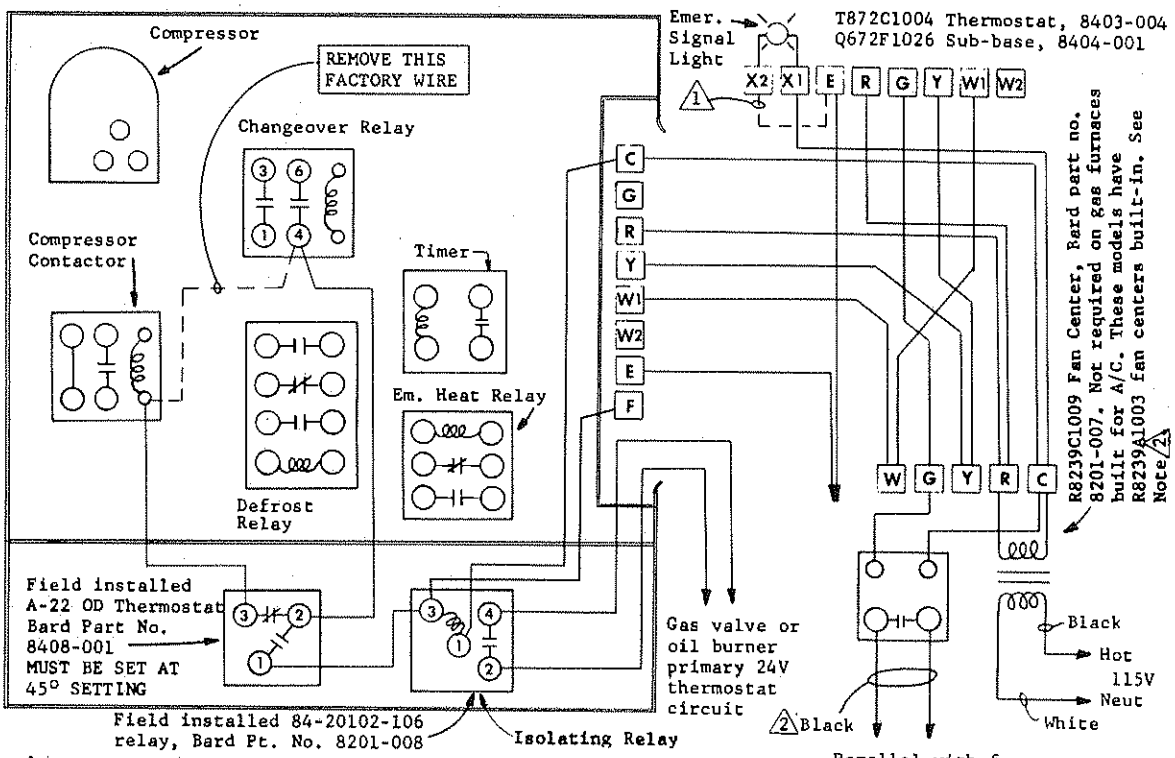

REMOTE HEAT PUMP CONTROL CIRCUIT WIRING IN CONJUNCTION WITH GAS OR OIL FURNACE FF-1

MODELS 30HPQ2 and 36HPQ2 with H3AQ

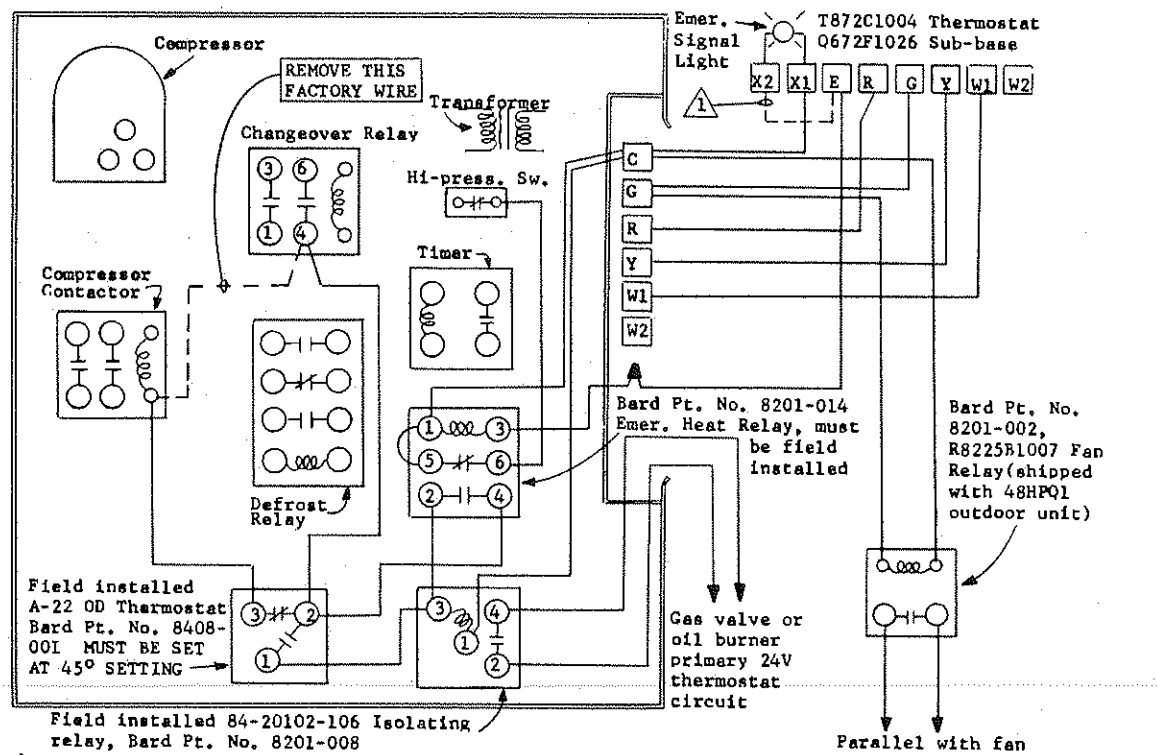

REMOTE HEAT PUMP CONTROL CIRCUIT WIRING IN CONJUNCTION WITH GAS OR OIL FURNACE FF-2

MODEL 48HPQ1 OUTDOOR UNIT and H4AQ INDOOR COIL