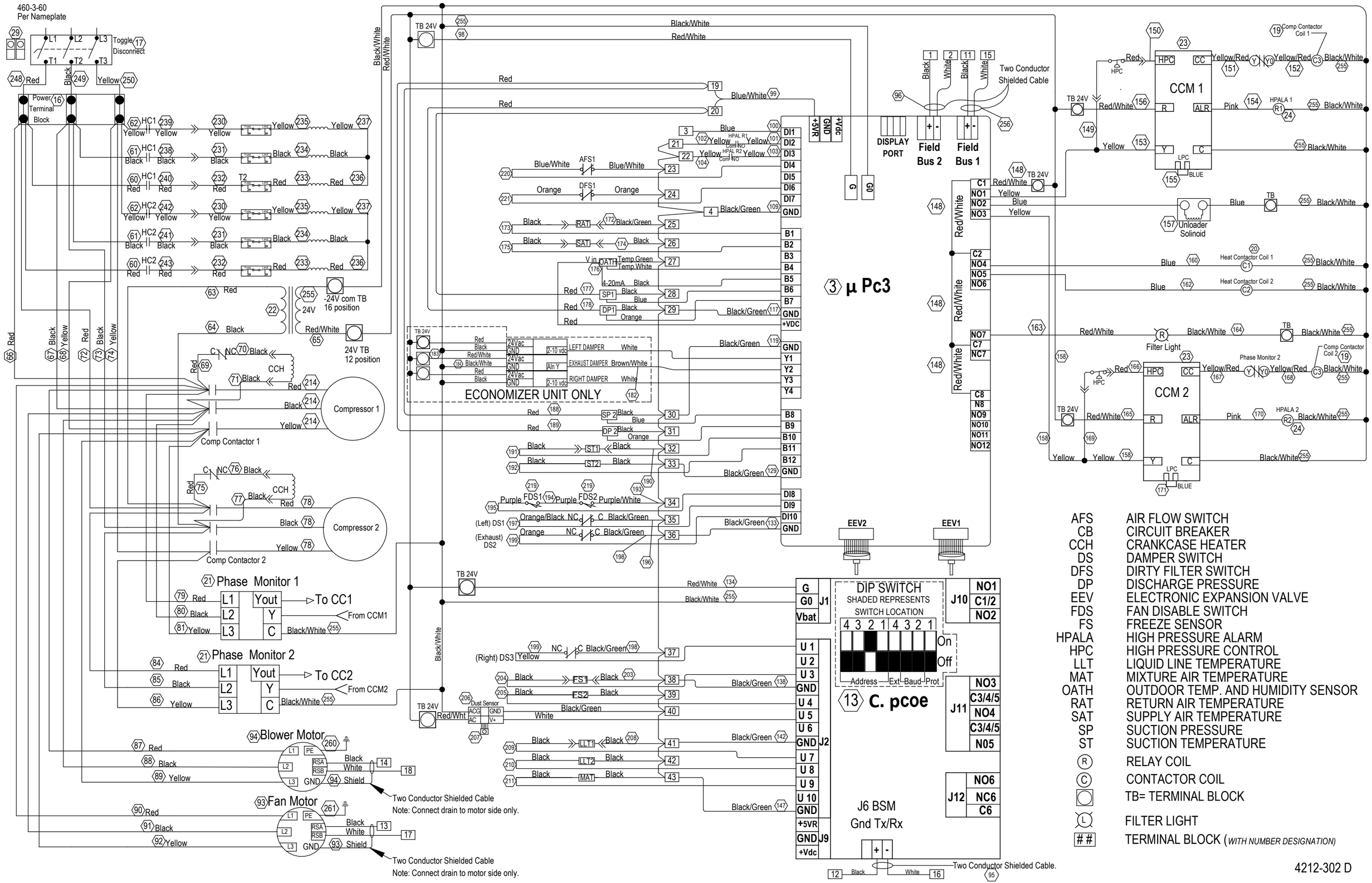

AFS	AIR FLOW SWITCH
CB	CIRCUIT BREAKER
CCH	CRANKCASE HEATER
DS	DAMPER SWITCH
DFS	DIRTY FILTER SWITCH
DP	DISCHARGE PRESSURE
EEV	ELECTRONIC EXPANSION VALVE
FDS	FAN DISABLE SWITCH
FS	FREEZE SENSOR
HPALA	HIGH PRESSURE ALARM
HPC	HIGH PRESSURE CONTROL
LLT	LIQUID LINE TEMPERATURE
MAT	MIXTURE AIR TEMPERATURE
OATH	OUTDOOR TEMP. AND HUMIDITY SENSOR
RAT	RETURN AIR TEMPERATURE
SAT	SUPPLY AIR TEMPERATURE
SP	SUCTION PRESSURE
ST	SUCTION TEMPERATURE
(R)	RELAY COIL
(C)	CONTACTOR COIL
◯	TB= TERMINAL BLOCK
(L)	FILTER LIGHT
##	TERMINAL BLOCK (*WITH NUMBER DESIGNATION*)

4212-302 D