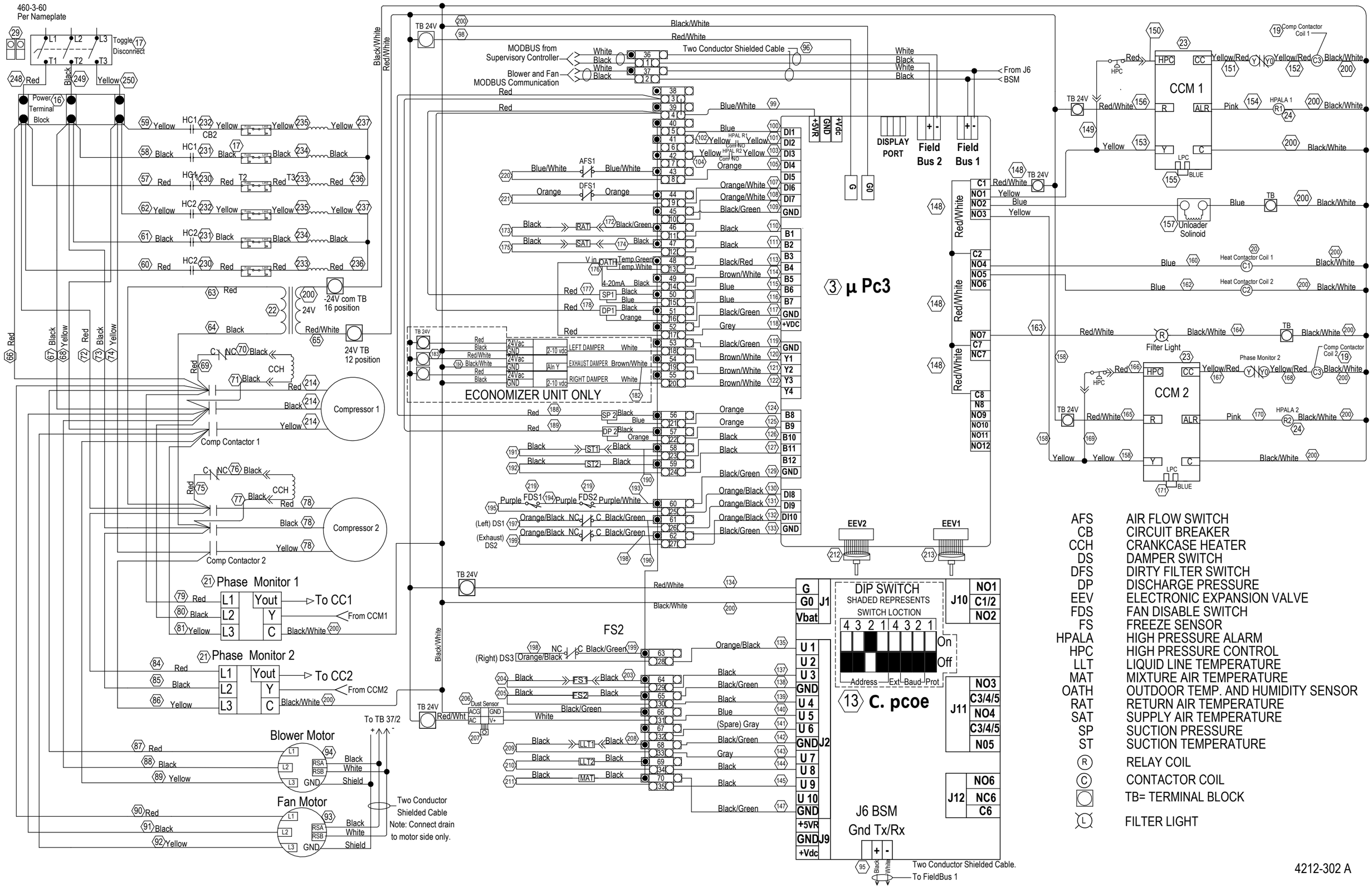
460-3-60
Per Nameplate
Toggle Disconnect
Power Terminal Block
CB2
-24V com TB 16 position
24V TB 12 position
Compressor 1
Comp Contactor 1
Compressor 2
Comp Contactor 2
Phase Monitor 1
Phase Monitor 2
To CC1
From CCM1
To CC2
From CCM2
Blower Motor
Fan Motor
To TB 37/2
Two Conductor Shielded Cable
Note: Connect drain to motor side only.
MODBUS from Supervisory Controller
Blower and Fan MODBUS Communication
Two Conductor Shielded Cable
From J6
BSM
DISPLAY PORT
Field Bus 2
Field Bus 1
ECONOMIZER UNIT ONLY
LEFT DAMPER
EXHAUST DAMPER
RIGHT DAMPER
3 µ Pc3
EEV2
EEV1
FS2
DIP SWITCH
SHADED REPRESENTS SWITCH LOCTION
Address Ext Baud Prot
13 C. pcoe
J6 BSM
Gnd Tx/Rx
Two Conductor Shielded Cable.
To FieldBus 1
CCM 1
CCM 2
Comp Contactor Coil 1
Comp Contactor Coil 2
Heat Contactor Coil 1
Heat Contactor Coil 2
Unloader Solinoid
Filter Light
Phase Monitor 2
HPALA 1
HPALA 2
AFS AIR FLOW SWITCH
CB CIRCUIT BREAKER
CCH CRANKCASE HEATER
DS DAMPER SWITCH
DFS DIRTY FILTER SWITCH
DP DISCHARGE PRESSURE
EEV ELECTRONIC EXPANSION VALVE
FDS FAN DISABLE SWITCH
FS FREEZE SENSOR
HPALA HIGH PRESSURE ALARM
HPC HIGH PRESSURE CONTROL
LLT LIQUID LINE TEMPERATURE
MAT MIXTURE AIR TEMPERATURE
OATH OUTDOOR TEMP. AND HUMIDITY SENSOR
RAT RETURN AIR TEMPERATURE
SAT SUPPLY AIR TEMPERATURE
SP SUCTION PRESSURE
ST SUCTION TEMPERATURE
RELAY COIL
CONTACTOR COIL
TB= TERMINAL BLOCK
FILTER LIGHT
4212-302 A