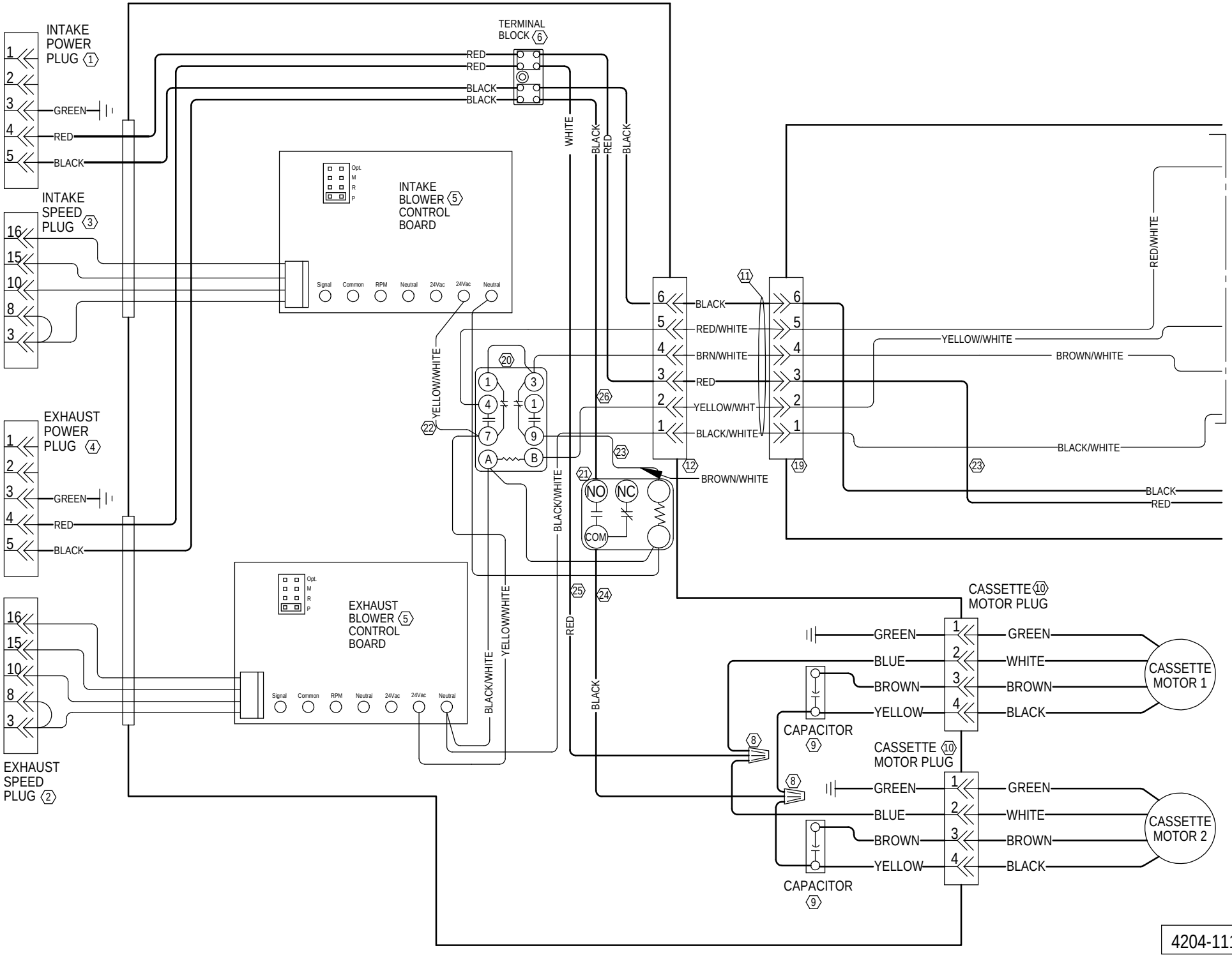
INTAKE POWER PLUG 1
GREEN
RED
BLACK
INTAKE SPEED PLUG 3
EXHAUST POWER PLUG 4
EXHAUST SPEED PLUG 2
TERMINAL BLOCK 6
RED
BLACK
WHITE
INTAKE BLOWER CONTROL BOARD 5
EXHAUST BLOWER CONTROL BOARD 5
Opt.
M
R
P
Signal
Common
RPM
Neutral
24Vac
YELLOW/WHITE
BLACK/WHITE
RED/WHITE
BRN/WHITE
YELLOW/WHT
BROWN/WHITE
NO
NC
COM
CASSETTE MOTOR PLUG 10
CASSETTE MOTOR 1
CASSETTE MOTOR 2
BLUE
WHITE
CAPACITOR 9
4204-111 A