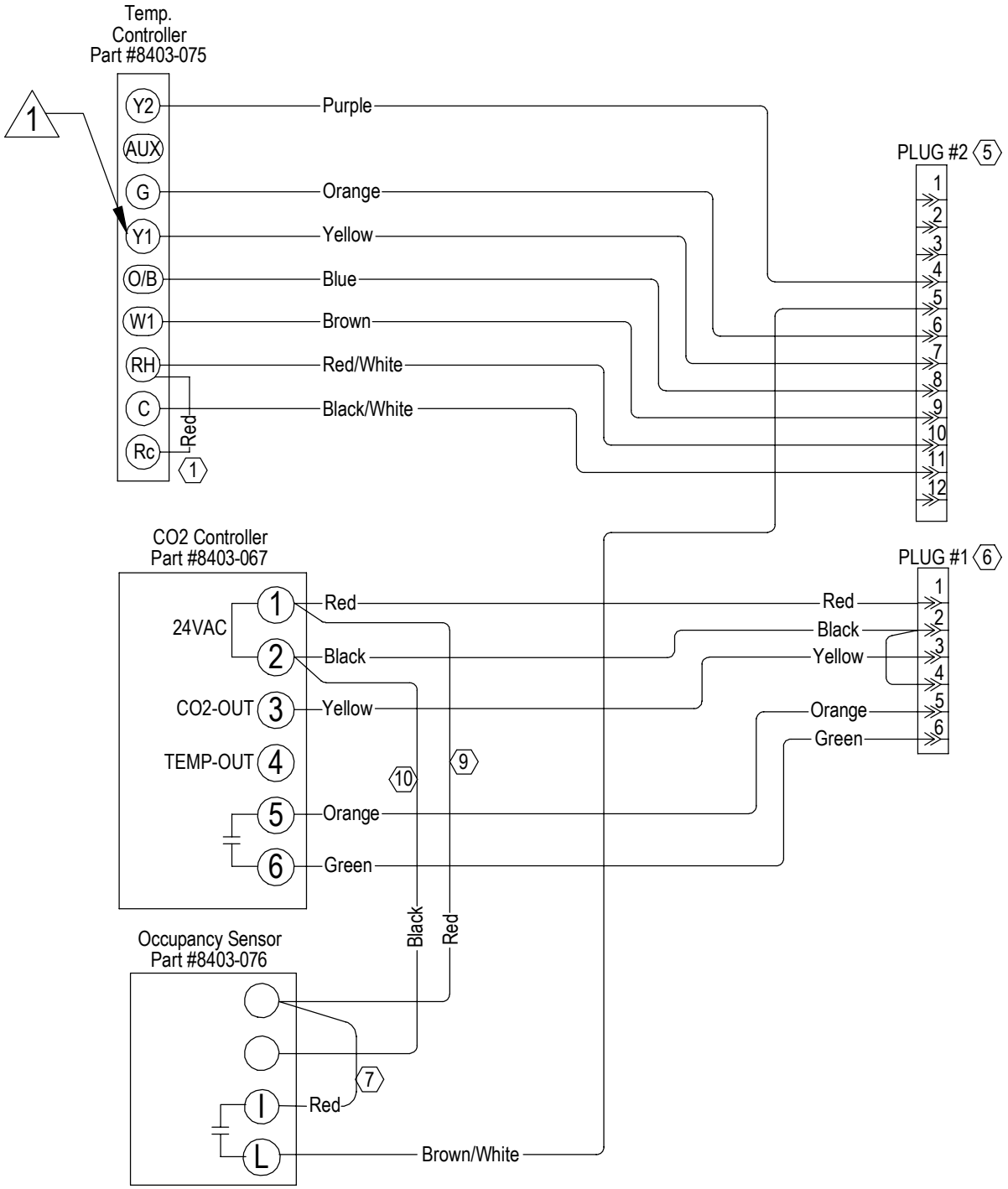
Temp.
Controller
Part #8403-075
1
Y2
AUX
G
Y1
O/B
W1
RH
C
Rc
Red
1
Purple
Orange
Yellow
Blue
Brown
Red/White
Black/White
PLUG #2 5
1
2
3
4
5
6
7
8
9
10
11
12
CO2 Controller
Part #8403-067
24VAC
CO2-OUT
TEMP-OUT
1
2
3
4
5
6
Red
Black
Yellow
Orange
Green
10
9
PLUG #1 6
1
2
3
4
5
6
Red
Black
Yellow
Orange
Green
Black
Red
Occupancy Sensor
Part #8403-076
7
I
L
Red
Brown/White

4115-115