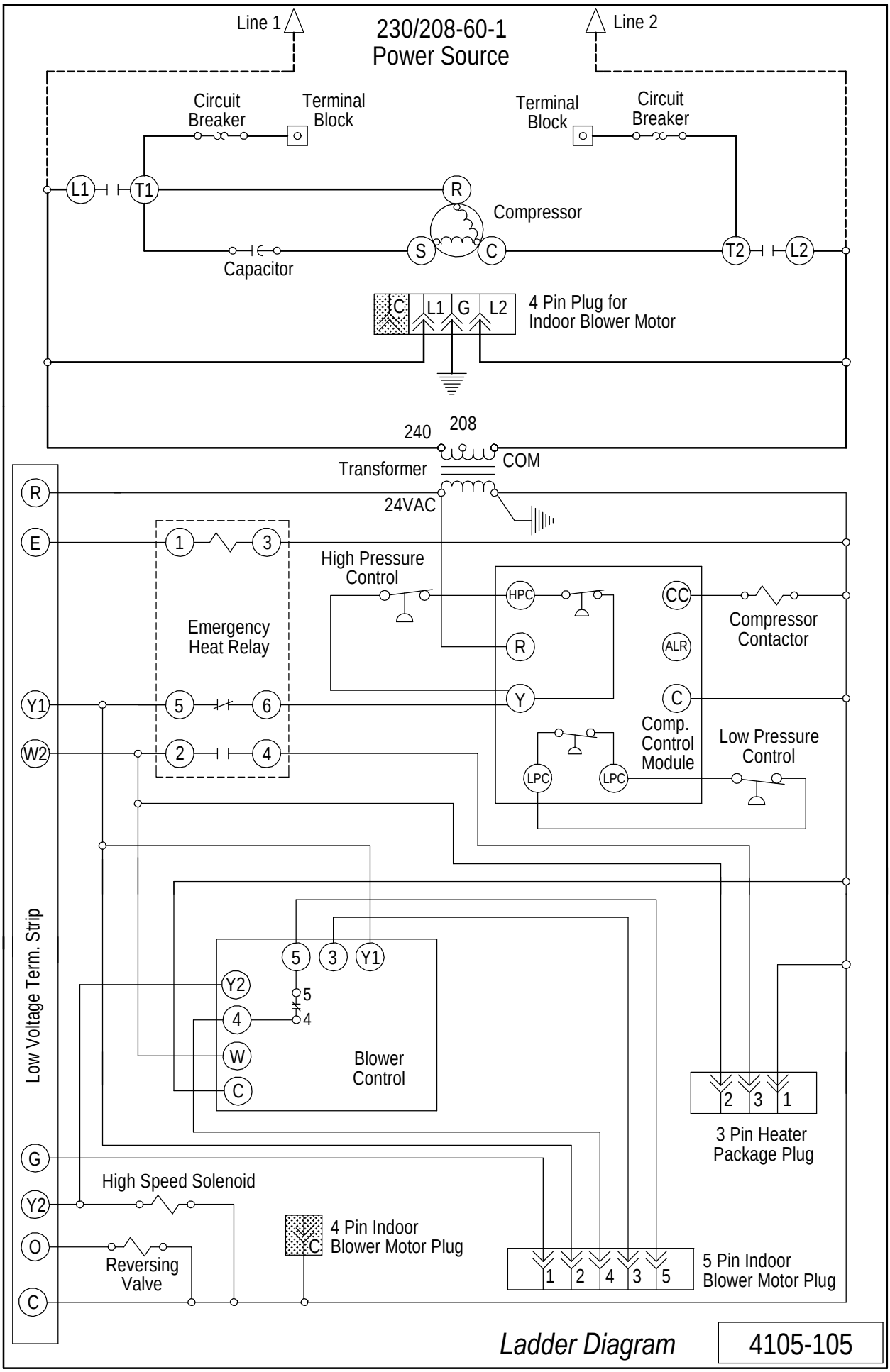

Ladder Diagram 4105-105