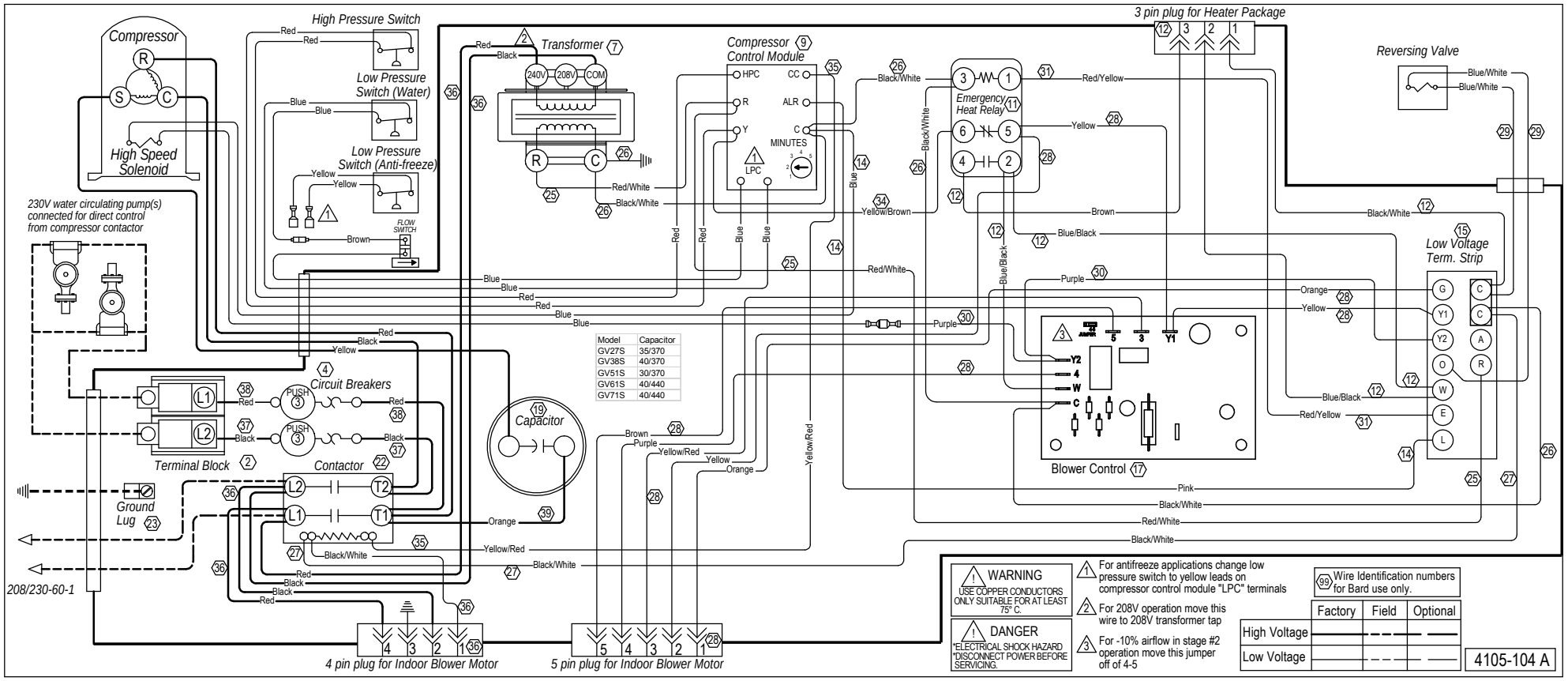
Compressor
High Pressure Switch
Low Pressure Switch (Water)
Low Pressure Switch (Anti-freeze)
High Speed Solenoid
FLOW SWITCH
230V water circulating pump(s) connected for direct control from compressor contactor
Transformer
240V
208V
COM
Compressor Control Module
HPC
CC
R
ALR
Y
C
MINUTES
LPC
Emergency Heat Relay
3 pin plug for Heater Package
Reversing Valve
Low Voltage Term. Strip
G
Y1
Y2
O
W
E
L
A
R
Blower Control
Y2
4
W
C
Y1
Circuit Breakers
PUSH
Terminal Block
L1
L2
Contactor
T1
T2
Capacitor
Ground Lug
208/230-60-1
4 pin plug for Indoor Blower Motor
5 pin plug for Indoor Blower Motor
Model | Capacitor
GV27S | 35/370
GV38S | 40/370
GV51S | 30/370
GV61S | 40/440
GV71S | 40/440
WARNING
USE COPPER CONDUCTORS ONLY SUITABLE FOR AT LEAST 75° C.
DANGER
*ELECTRICAL SHOCK HAZARD
*DISCONNECT POWER BEFORE SERVICING.
1 For antifreeze applications change low pressure switch to yellow leads on compressor control module "LPC" terminals
2 For 208V operation move this wire to 208V transformer tap
3 For -10% airflow in stage #2 operation move this jumper off of 4-5
99 Wire Identification numbers for Bard use only.
Factory | Field | Optional
High Voltage
Low Voltage
4105-104 A