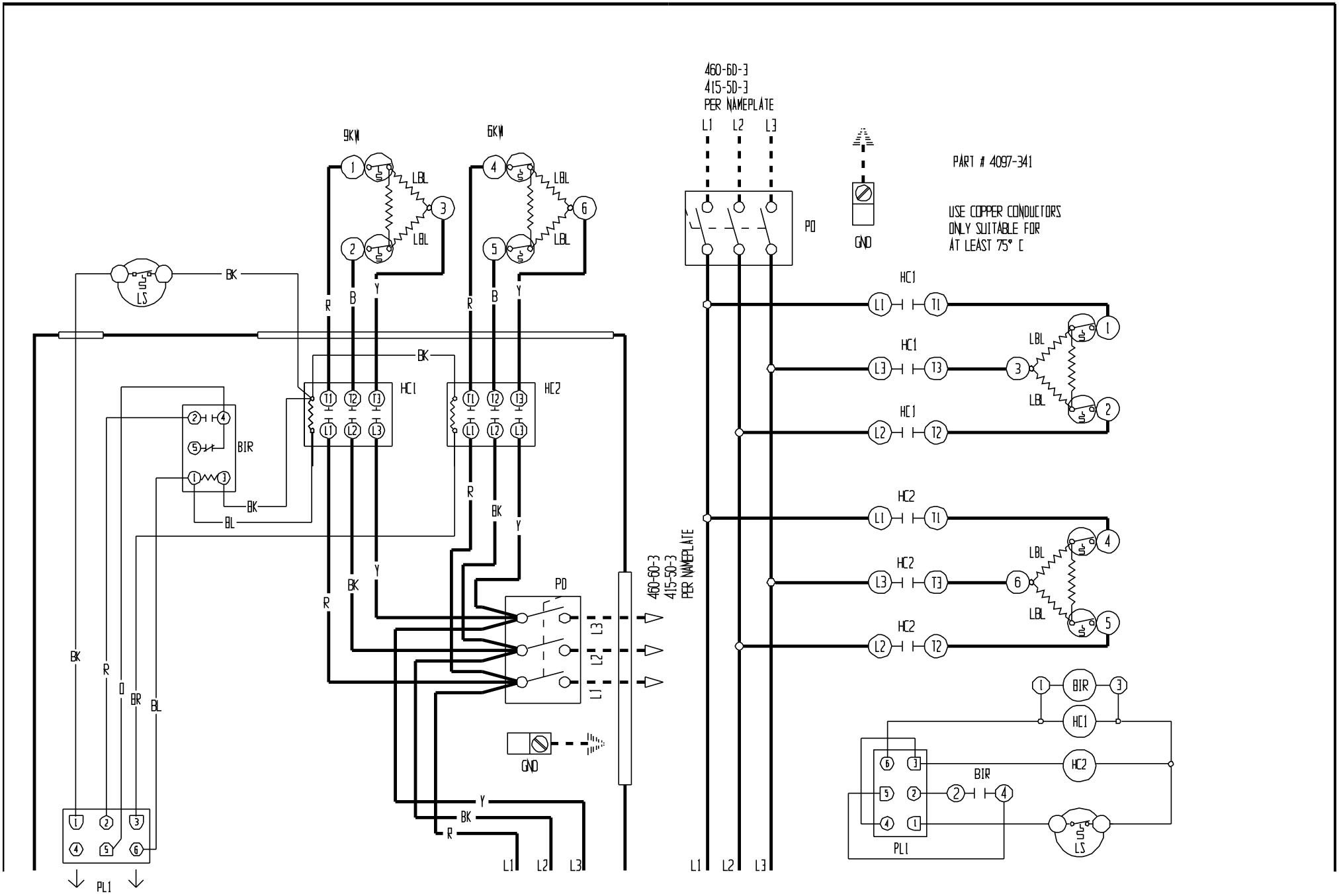
460-60-3
415-50-3
PER NAMEPLATE
L1 L2 L3
PART # 4097-341
USE COPPER CONDUCTORS
ONLY SUITABLE FOR
AT LEAST 75° C
9KW
6KW
LBL
HC1
HC2
BIR
PD
GND
LS
PL1
BK
R
B
Y
BL
O
BR
460-60-3
415-50-3
PER NAMEPLATE