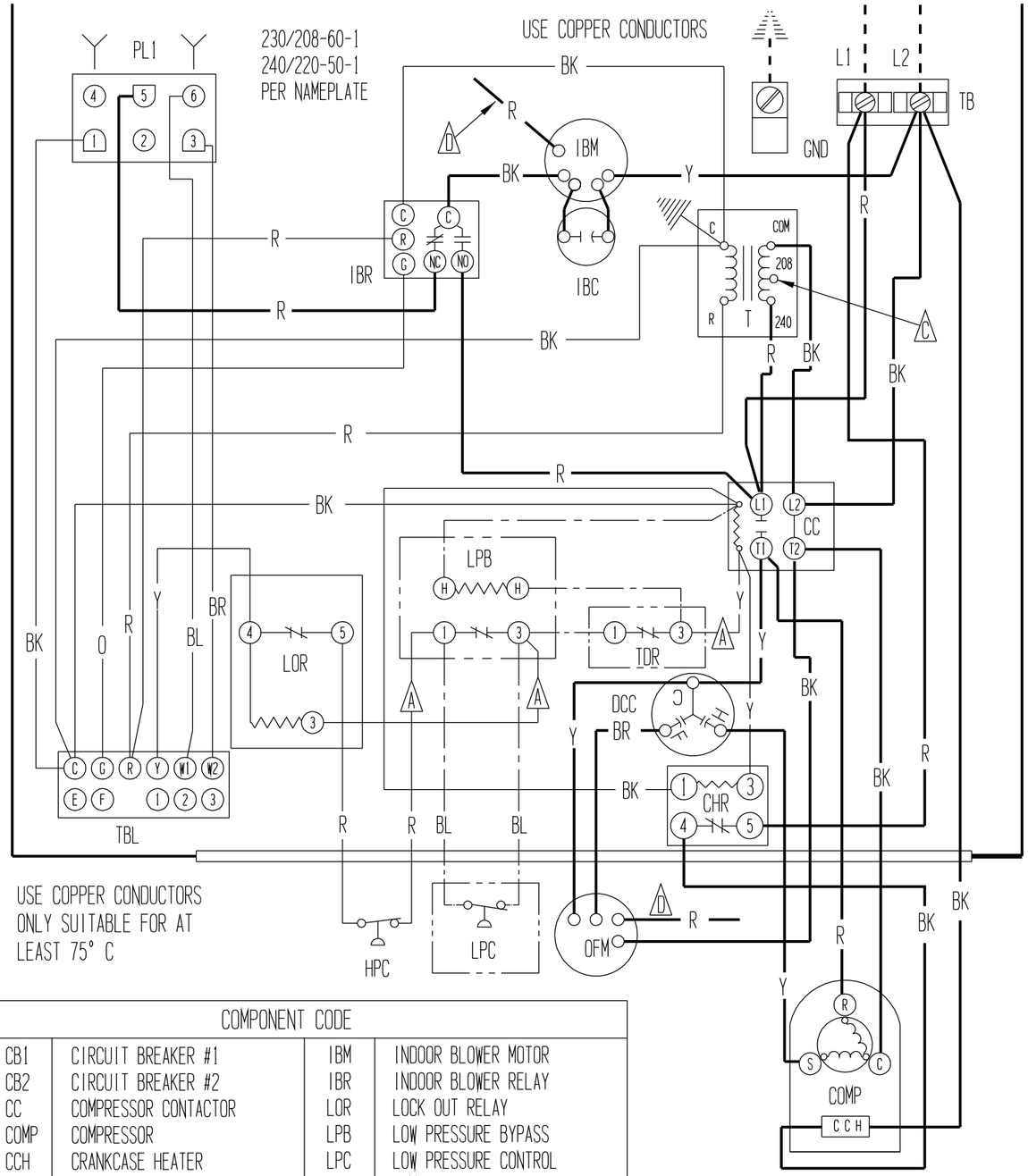

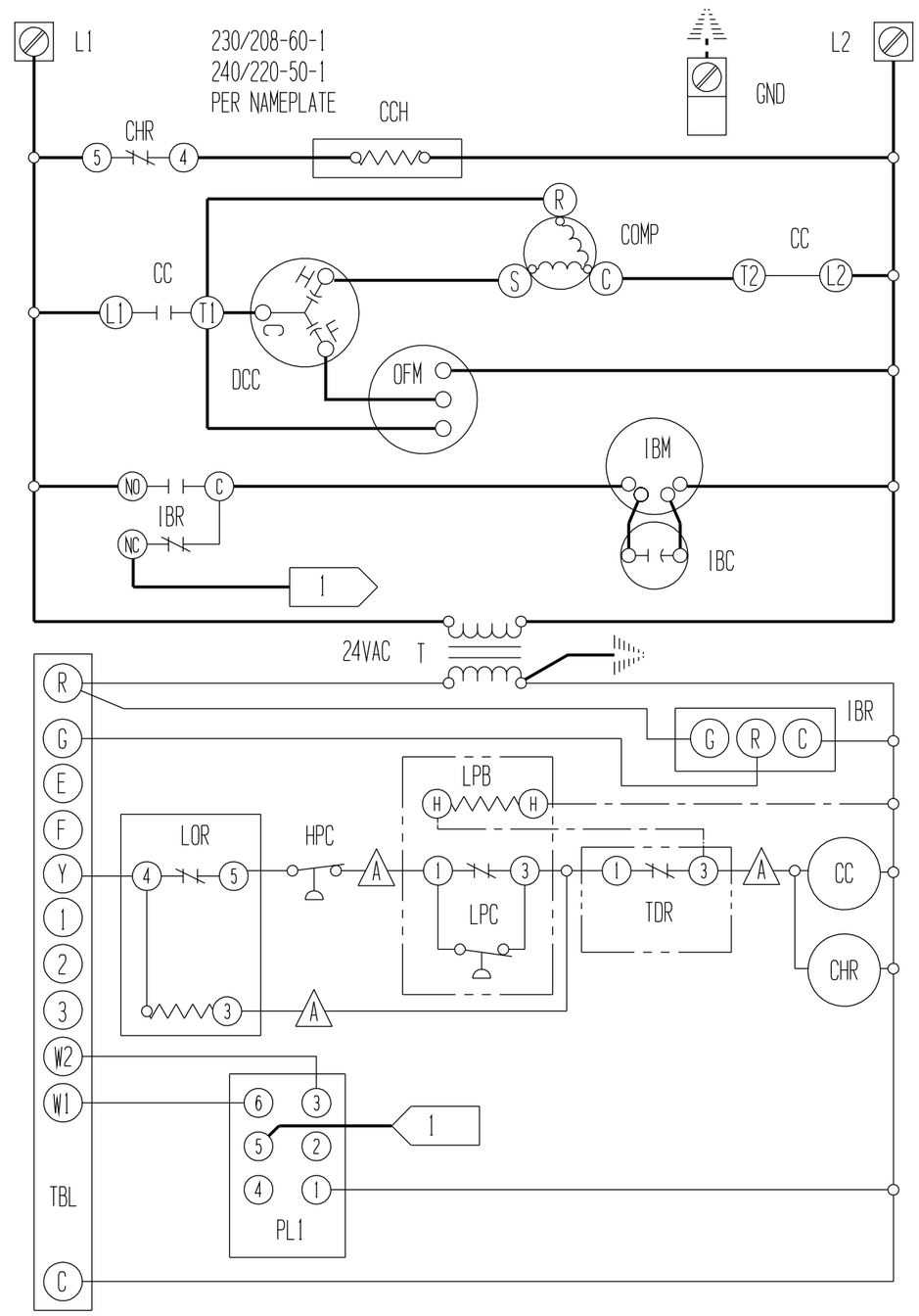

COMPONENT CODE			
CB1	CIRCUIT BREAKER #1	IBM	INDOOR BLOWER MOTOR
CB2	CIRCUIT BREAKER #2	IBR	INDOOR BLOWER RELAY
CC	COMPRESSOR CONTACTOR	LOR	LOCK OUT RELAY
COMP	COMPRESSOR	LPB	LOW PRESSURE BYPASS
CCH	CRANKCASE HEATER	LPC	LOW PRESSURE CONTROL
CHR	CRANKCASE HEATER RELAY	LS	LIMIT SWITCH
DCC	DUAL CAN CAPACITOR	OFM	OUTDOOR FAN MOTOR
GND	EQUIPMENT GROUND	PL1	PLUG #1
H1	HEAT STRIP #1	SK	START KIT
H2	HEAT STRIP #2	T	TRANSFORMER
HC1	HEATER CONTACTOR #1	TB	TERMINAL BLOCK
HC2	HEATER CONTACTOR #2	TBL	LOW VOLTAGE TERMINAL BLOCK
HPC	HIGH PRESSURE CONTROL	TCO	THERMAL CUTOFF
IBC	INDOOR BLOWER CAPACITOR	TDR	TIME DELAY RELAY

A LABELED WIRES CONNECT IF NO OPTIONS USED.

C MOVE RED WIRE TO 208V TAP FOR 208V OPERATION

D RED (LOW) BLACK (HIGH)

	FACTORY STD.	FIELD	OPTIONAL
HIGH VOLTAGE	———	- - - - -	—·—·—
LOW VOLTAGE	———	- - - - -	—·—·—
ACCESSORY			—··—··—

COLOR CODE							
BK	BLACK	Y	YELLOW	V	VIOLET	T	TAN
BR	BROWN	G	GREEN	(PR)	PURPLE	PK	PINK
R	RED	BL	BLUE	GY	GRAY	L	LAVENDER
O	ORANGE	W	WHITE	(S)	SLATE		

BARD MFG. CO.

4095-120 A