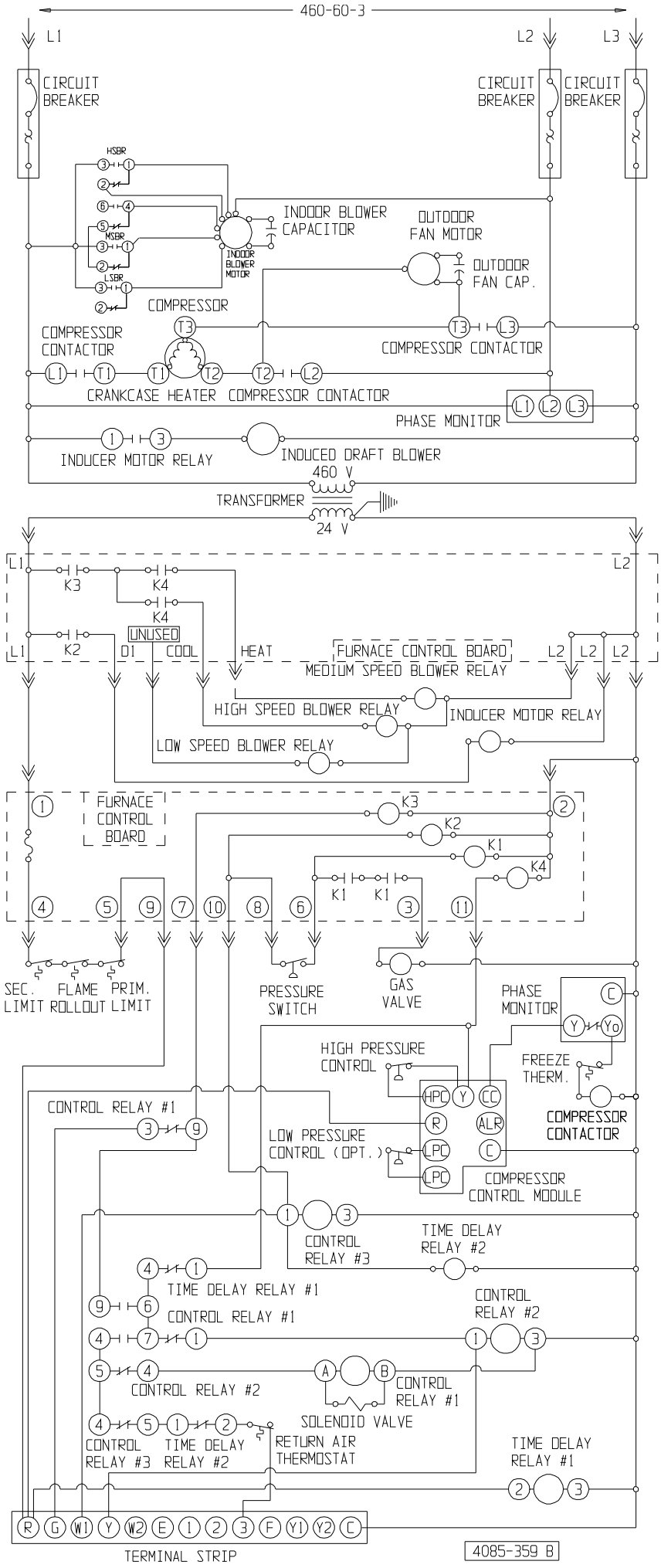
460-60-3
L1
L2
L3
CIRCUIT BREAKER
CIRCUIT BREAKER
CIRCUIT BREAKER
HSBR
MSBR
LSBR
INDOOR BLOWER MOTOR
INDOOR BLOWER CAPACITOR
OUTDOOR FAN MOTOR
OUTDOOR FAN CAP.
COMPRESSOR
COMPRESSOR CONTACTOR
COMPRESSOR CONTACTOR
CRANKCASE HEATER
COMPRESSOR CONTACTOR
PHASE MONITOR
INDUCER MOTOR RELAY
INDUCED DRAFT BLOWER
460 V
TRANSFORMER
24 V
K3
K4
K4
UNUSED
K2
D1
COOL
HEAT
FURNACE CONTROL BOARD
MEDIUM SPEED BLOWER RELAY
HIGH SPEED BLOWER RELAY
INDUCER MOTOR RELAY
LOW SPEED BLOWER RELAY
FURNACE CONTROL BOARD
K3
K2
K1
K4
K1
K1
SEC. LIMIT
FLAME ROLLOUT
PRIM. LIMIT
PRESSURE SWITCH
GAS VALVE
PHASE MONITOR
HIGH PRESSURE CONTROL
FREEZE THERM.
COMPRESSOR CONTACTOR
CONTROL RELAY #1
LOW PRESSURE CONTROL (OPT.)
COMPRESSOR CONTROL MODULE
CONTROL RELAY #3
TIME DELAY RELAY #2
TIME DELAY RELAY #1
CONTROL RELAY #1
CONTROL RELAY #2
CONTROL RELAY #2
CONTROL RELAY #1
SOLENOID VALVE
CONTROL RELAY #3
TIME DELAY RELAY #2
RETURN AIR THERMOSTAT
TIME DELAY RELAY #1
TERMINAL STRIP
4085-359 B