Filter Switch Wiring Diagram

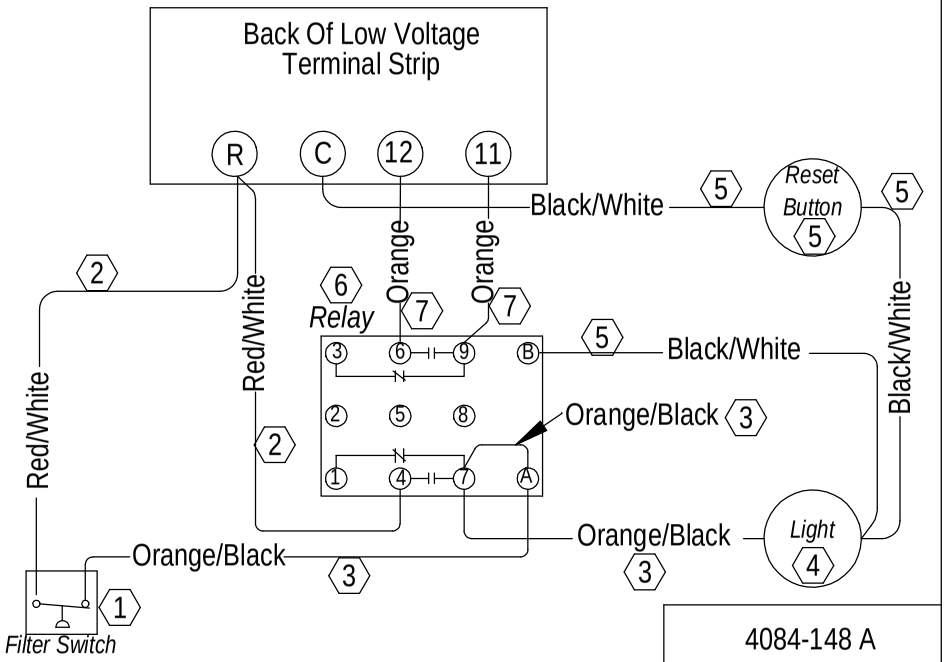

4084-148 A

Filter Switch Wiring Diagram

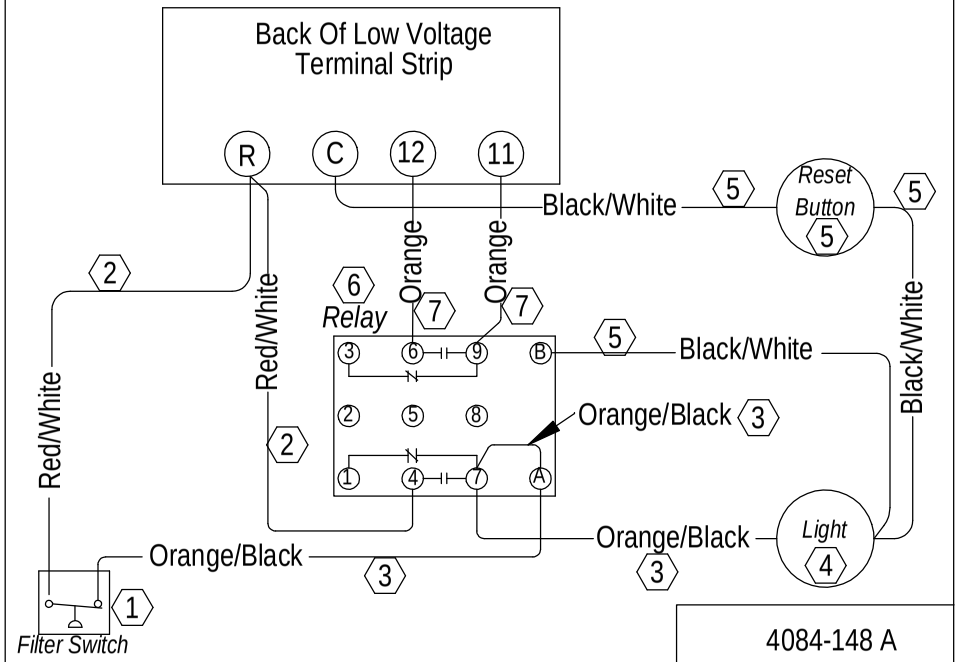

4084-148 A

Filter Switch Wiring Diagram

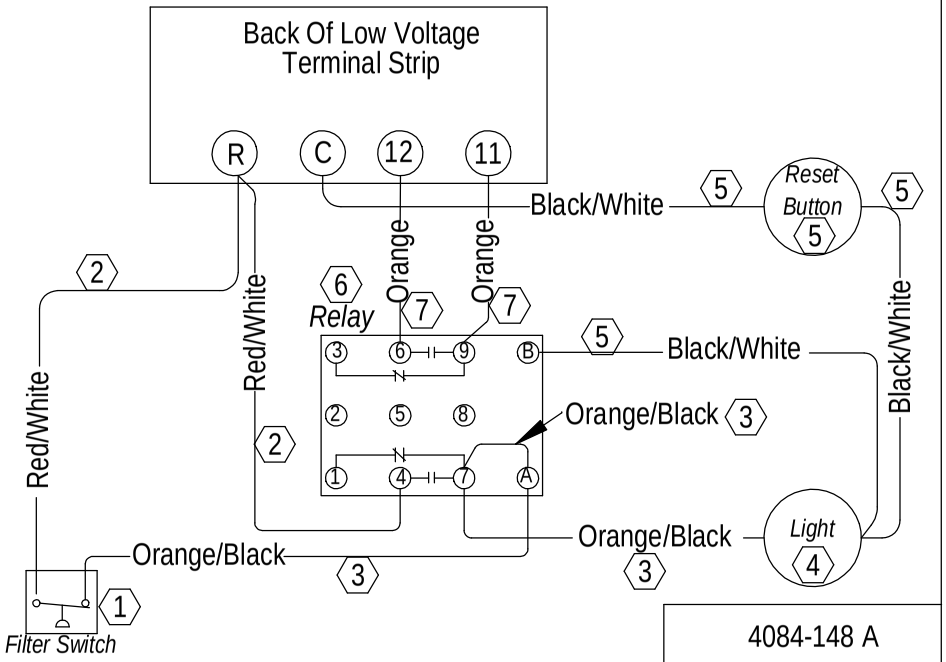

4084-148 A

Filter Switch Wiring Diagram

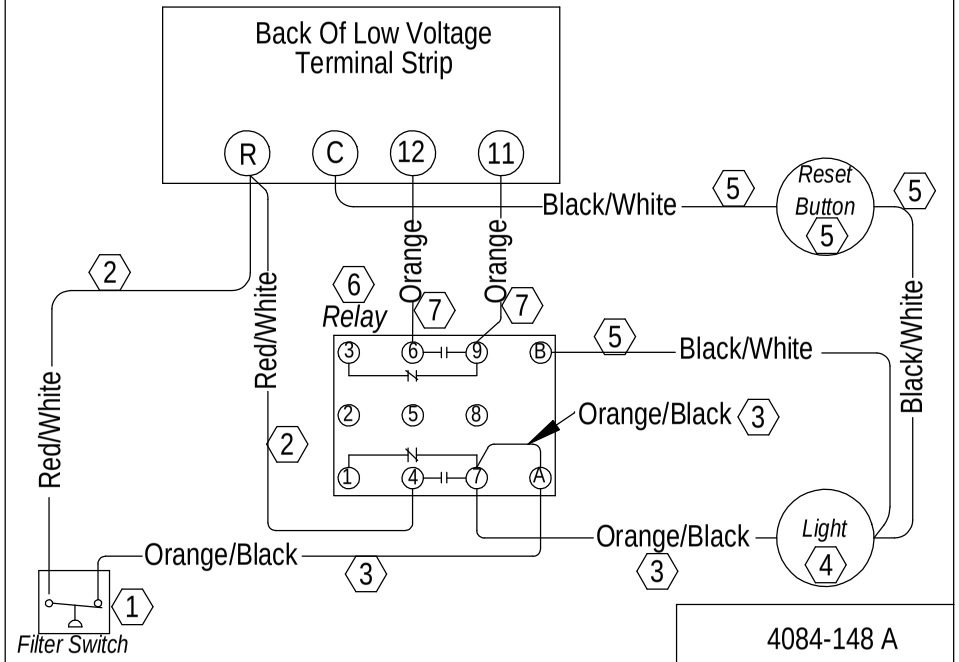

4084-148 A