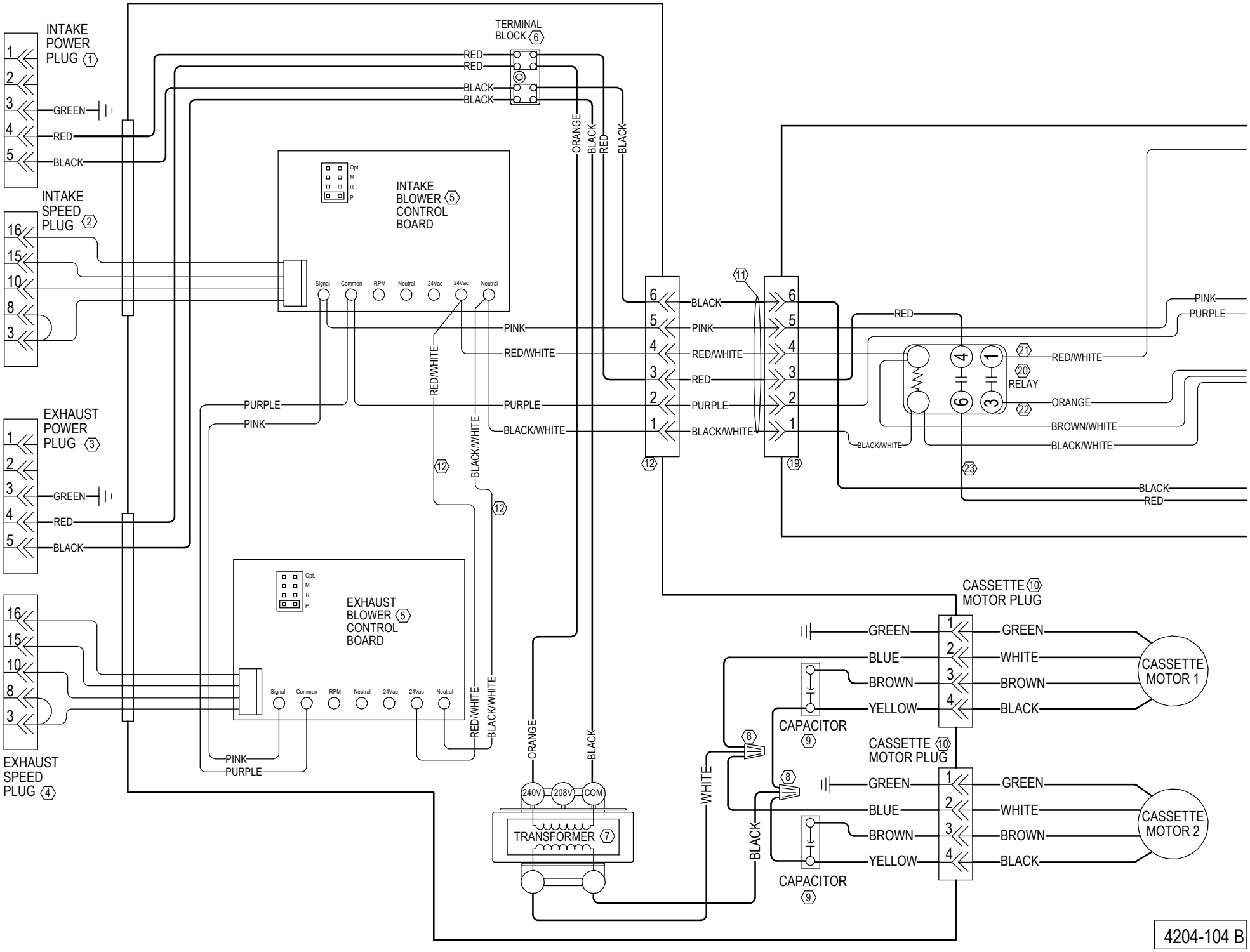
INTAKE POWER PLUG 1
INTAKE SPEED PLUG 2
EXHAUST POWER PLUG 3
EXHAUST SPEED PLUG 4
TERMINAL BLOCK 6
INTAKE BLOWER CONTROL BOARD 5
EXHAUST BLOWER CONTROL BOARD 5
Opt.
M
R
P
Signal
Common
RPM
Neutral
24Vac
24Vac
Neutral
TRANSFORMER 7
240V
208V
COM
CASSETTE MOTOR PLUG 10
CASSETTE MOTOR 1
CASSETTE MOTOR 2
CAPACITOR 9
RELAY 20
GREEN
RED
BLACK
PINK
PURPLE
RED/WHITE
BLACK/WHITE
ORANGE
BROWN/WHITE
WHITE
BLUE
YELLOW
4204-104 B