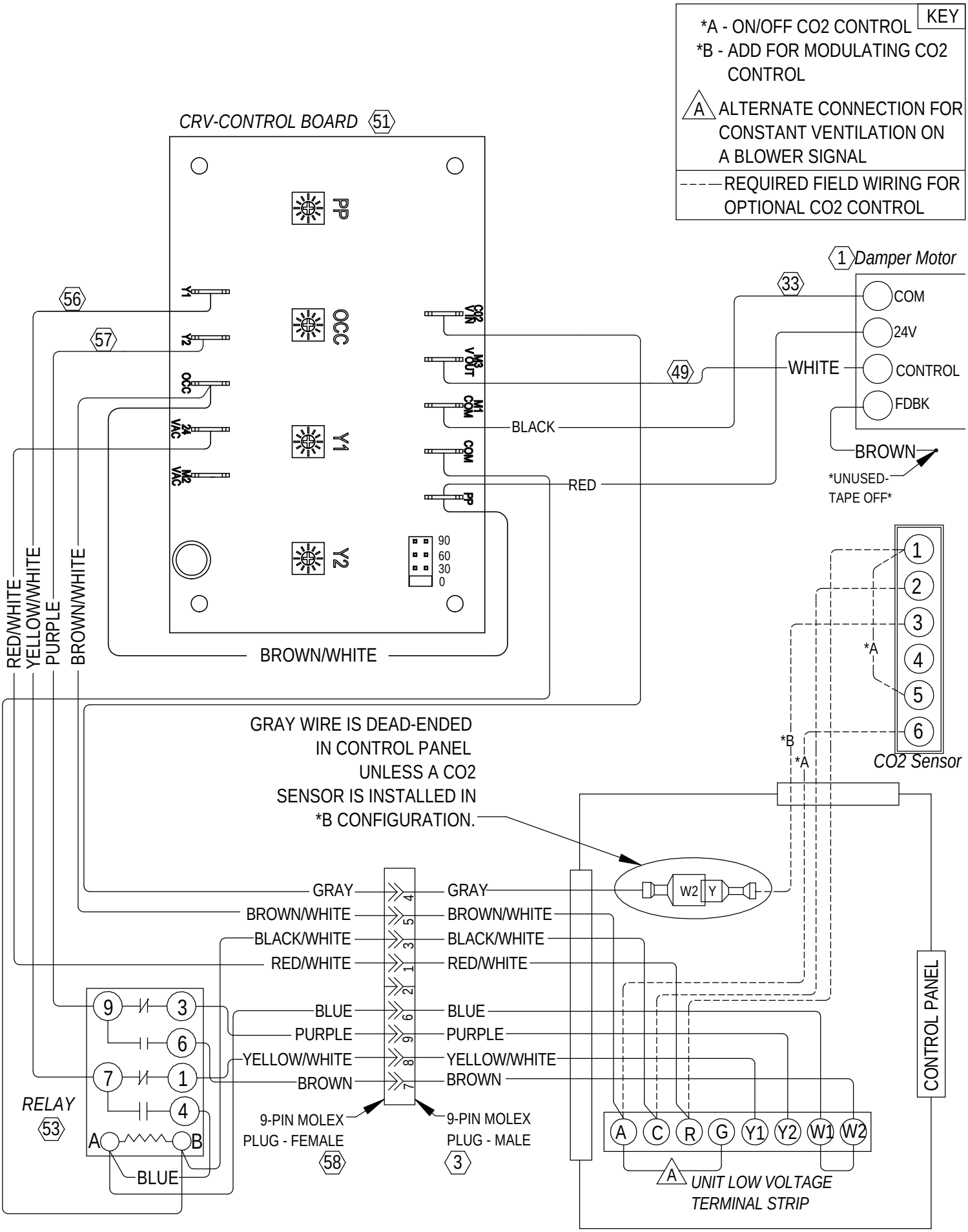
KEY
*A - ON/OFF CO2 CONTROL
*B - ADD FOR MODULATING CO2 CONTROL
A ALTERNATE CONNECTION FOR CONSTANT VENTILATION ON A BLOWER SIGNAL
REQUIRED FIELD WIRING FOR OPTIONAL CO2 CONTROL
CRV-CONTROL BOARD 51
PP
OCC
Y1
Y2
Y1
Y2
OCC
24 VAC
M2 VAC
CO2 VIN
M3 VOUT
M1 COM
COM
PP
90
60
30
0
1 Damper Motor
COM
24V
CONTROL
FDBK
33
49
56
57
WHITE
BLACK
RED
BROWN
UNUSED-TAPE OFF
RED/WHITE
YELLOW/WHITE
PURPLE
BROWN/WHITE
BROWN/WHITE
*A
*B
*A
CO2 Sensor
GRAY WIRE IS DEAD-ENDED IN CONTROL PANEL UNLESS A CO2 SENSOR IS INSTALLED IN *B CONFIGURATION.
W2
Y
GRAY
BROWN/WHITE
BLACK/WHITE
RED/WHITE
BLUE
PURPLE
YELLOW/WHITE
BROWN
9-PIN MOLEX PLUG - FEMALE 58
9-PIN MOLEX PLUG - MALE 3
RELAY 53
A
B
BLUE
A C R G Y1 Y2 W1 W2
A UNIT LOW VOLTAGE TERMINAL STRIP
CONTROL PANEL

4056-264 A