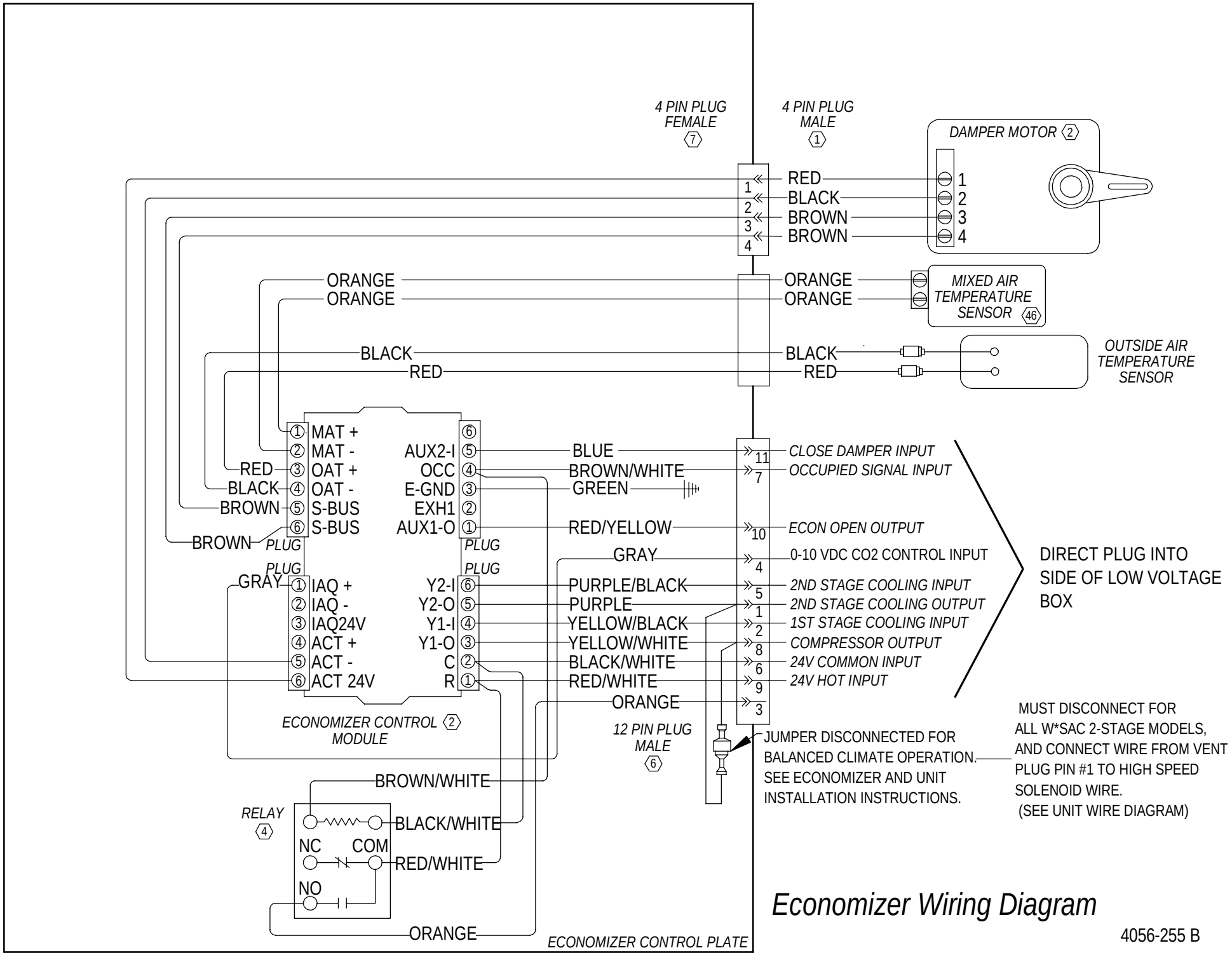

Economizer Wiring Diagram

4056-255 B