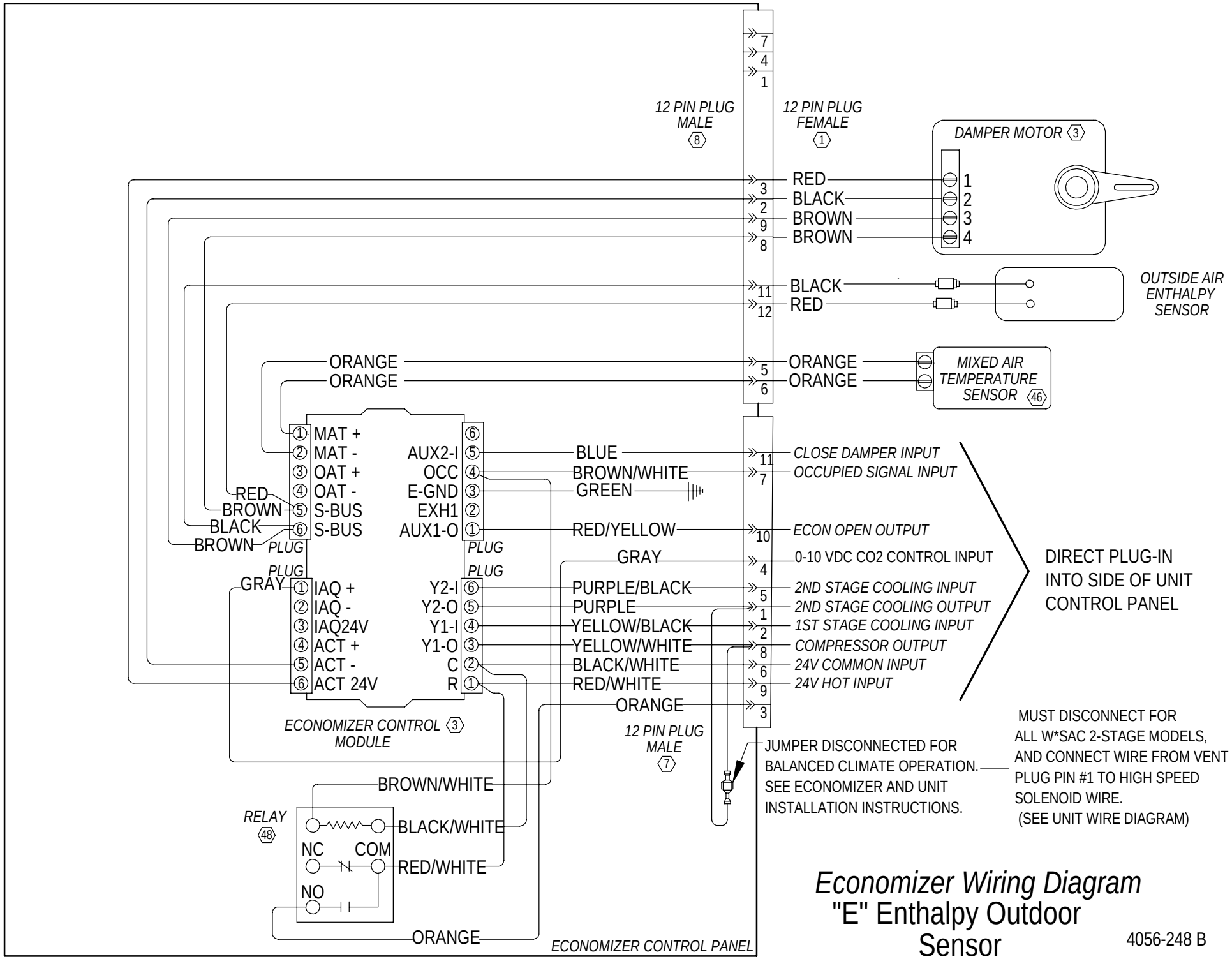

Economizer Wiring Diagram
"E" Enthalpy Outdoor Sensor

4056-248 B