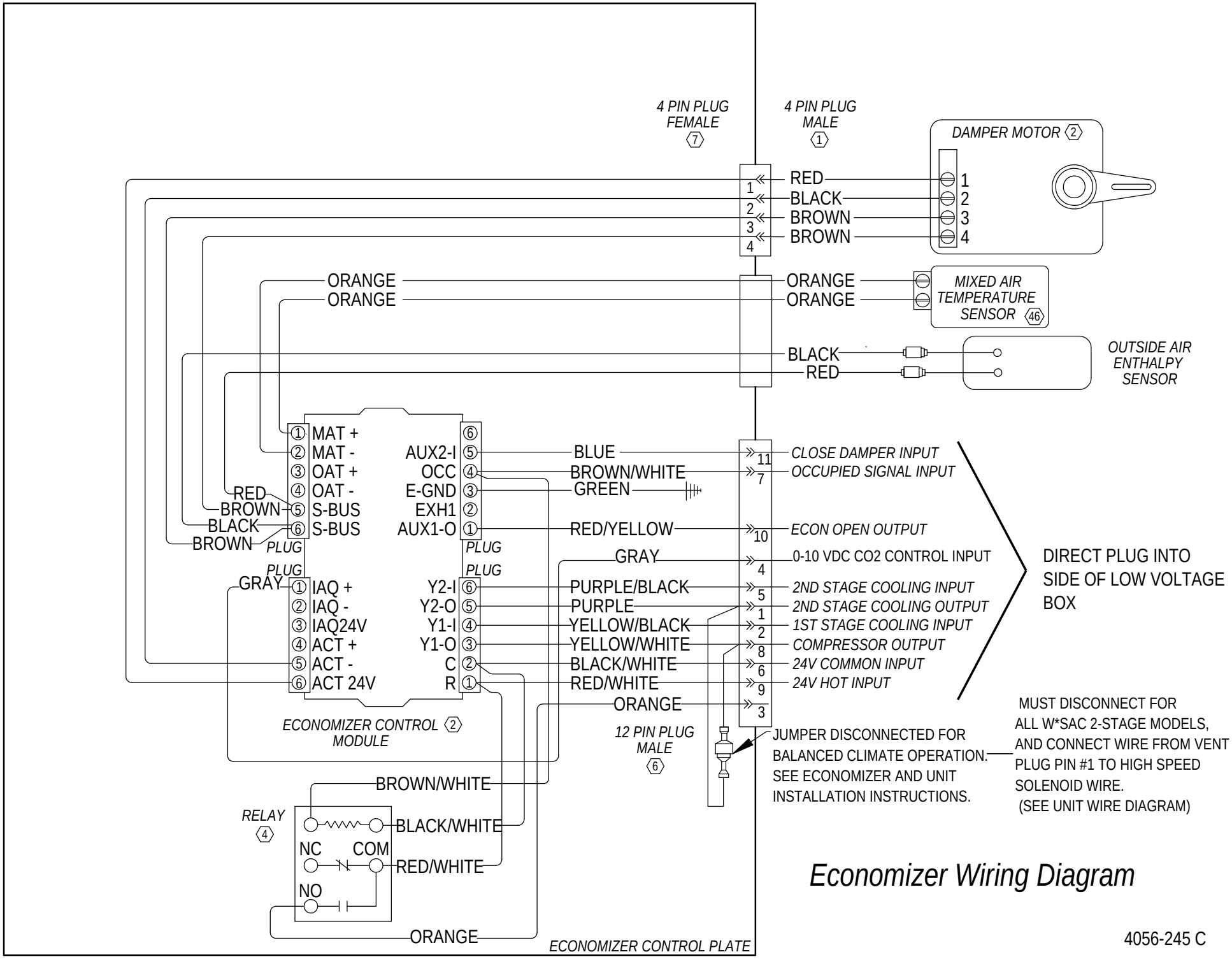

Economizer Wiring Diagram

4056-245 C