DANGER

*ELECTRICAL SHOCK HAZARD
*DISCONNECT POWER BEFORE SERVICING.

WARNING

USE COPPER CONDUCTORS ONLY SUITABLE FOR AT LEAST 75° C.

Note: See Control Wiring Section of Installation Inst. for Wiring Energy Recovery to Unit

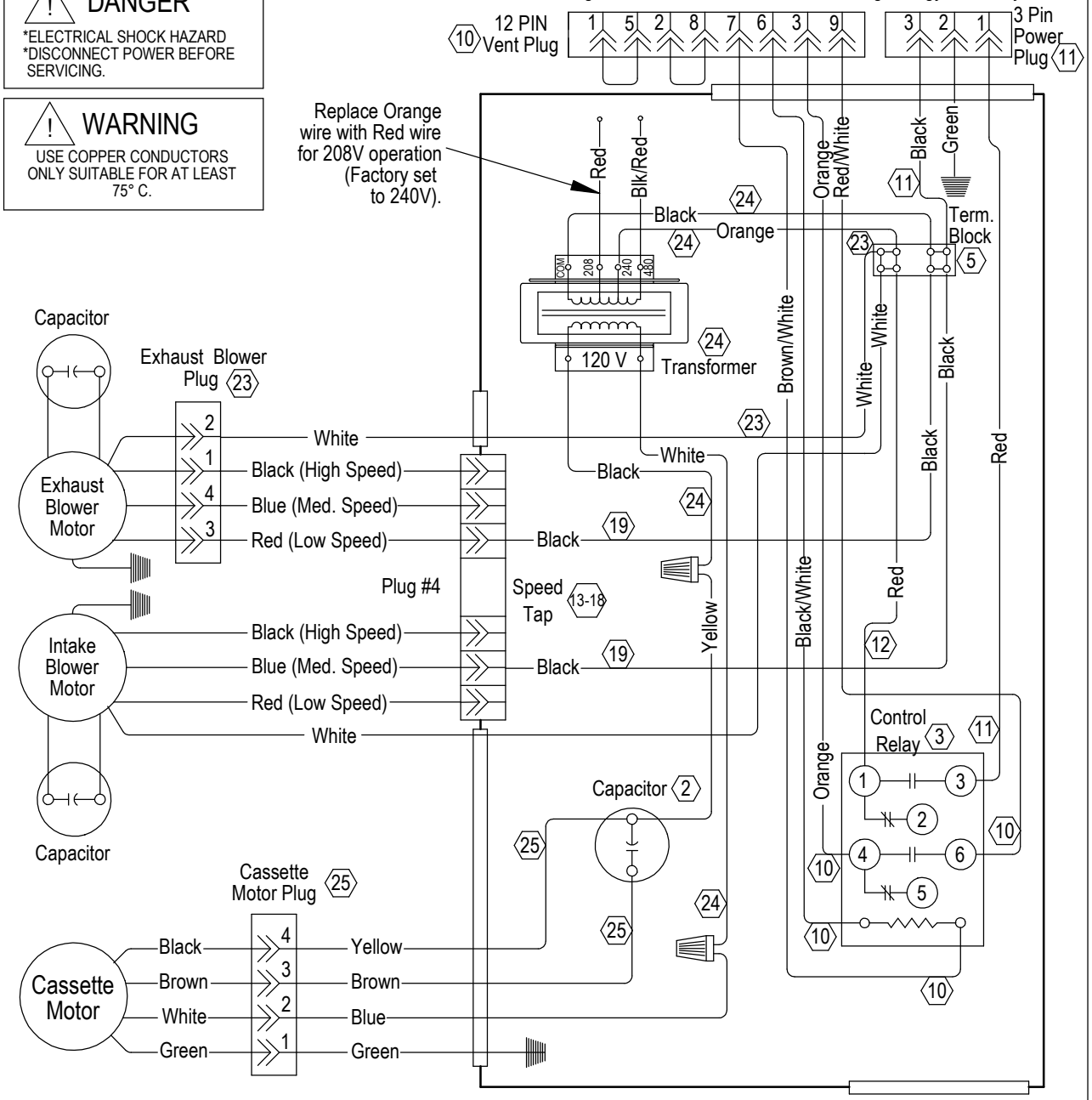

Standard Diagram

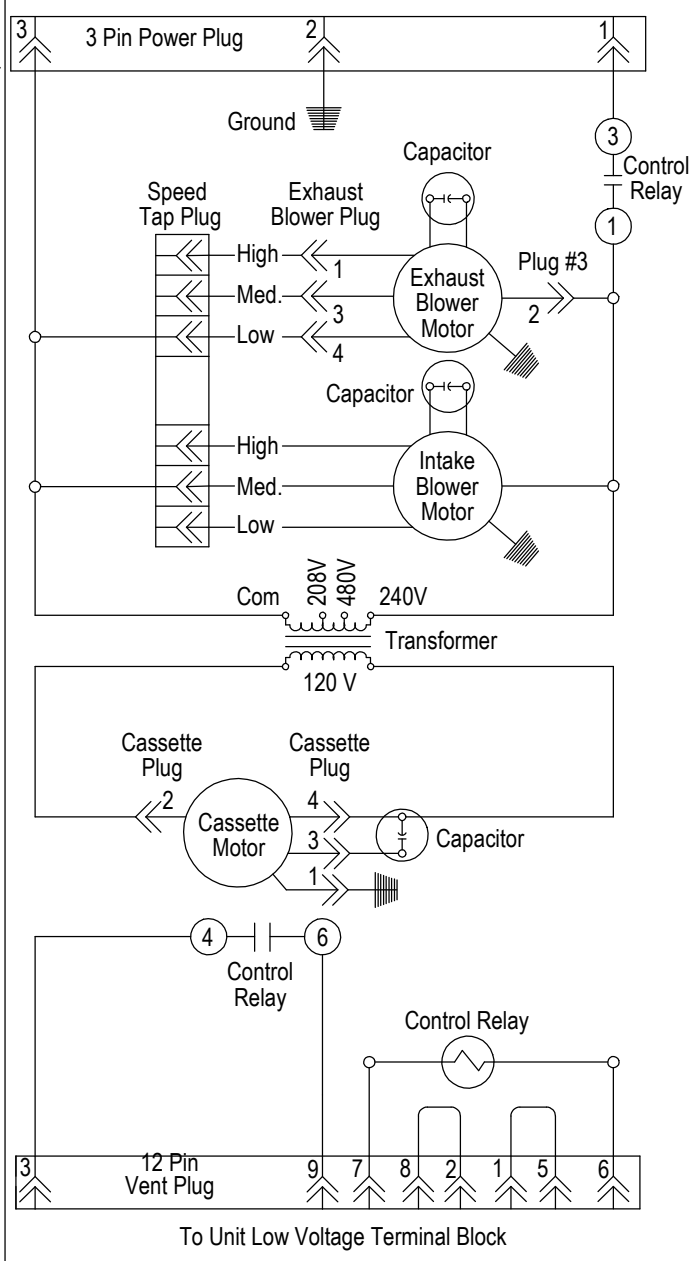

Note: See Control Wiring Section of Installation Inst. for Wiring Energy Recovery to Unit

Ladder Diagram

4056-243