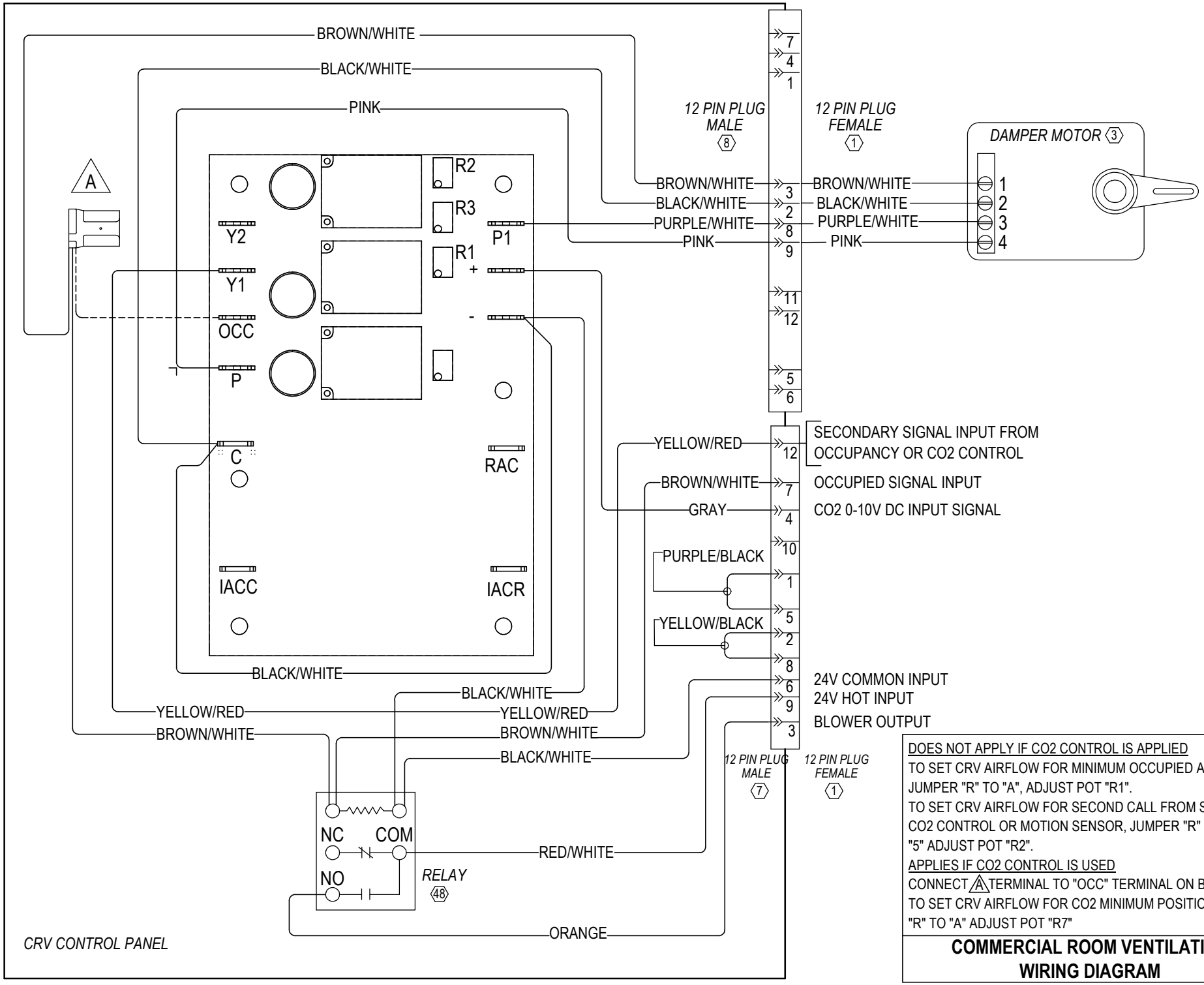


DOES NOT APPLY IF CO2 CONTROL IS APPLIED
TO SET CRV AIRFLOW FOR MINIMUM OCCUPIED AIRFLOW, JUMPER "R" TO "A", ADJUST POT "R1".
TO SET CRV AIRFLOW FOR SECOND CALL FROM SWITCHED CO2 CONTROL OR MOTION SENSOR, JUMPER "R" TO "A" AND "5" ADJUST POT "R2".
APPLIES IF CO2 CONTROL IS USED
CONNECT A TERMINAL TO "OCC" TERMINAL ON BOARD
TO SET CRV AIRFLOW FOR CO2 MINIMUM POSITION, JUMPER "R" TO "A" ADJUST POT "R7"

**COMMERCIAL ROOM VENTILATION WIRING DIAGRAM**

4056-236