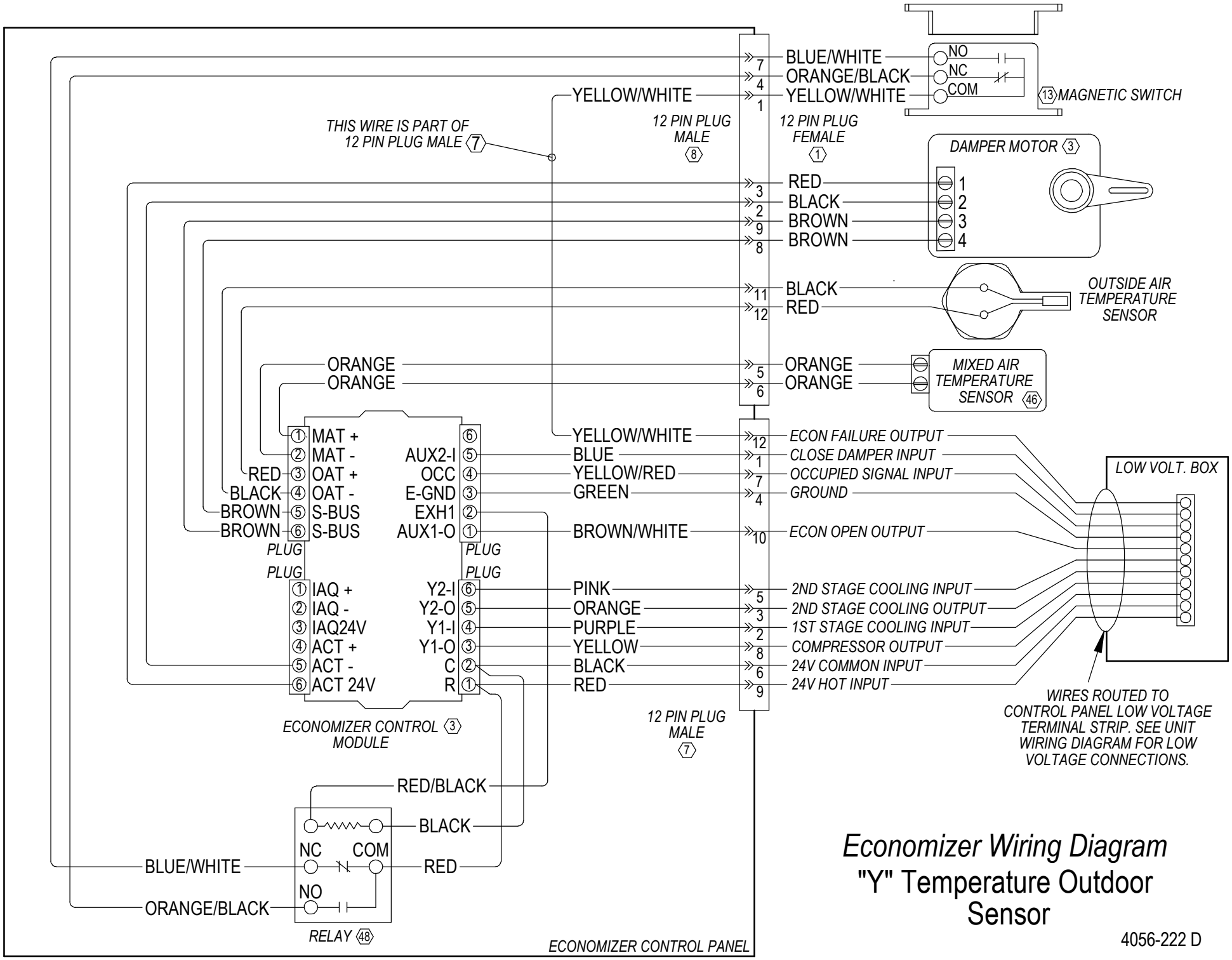

Economizer Wiring Diagram

"Y" Temperature Outdoor Sensor

4056-222 D