Economizer Wiring Diagram

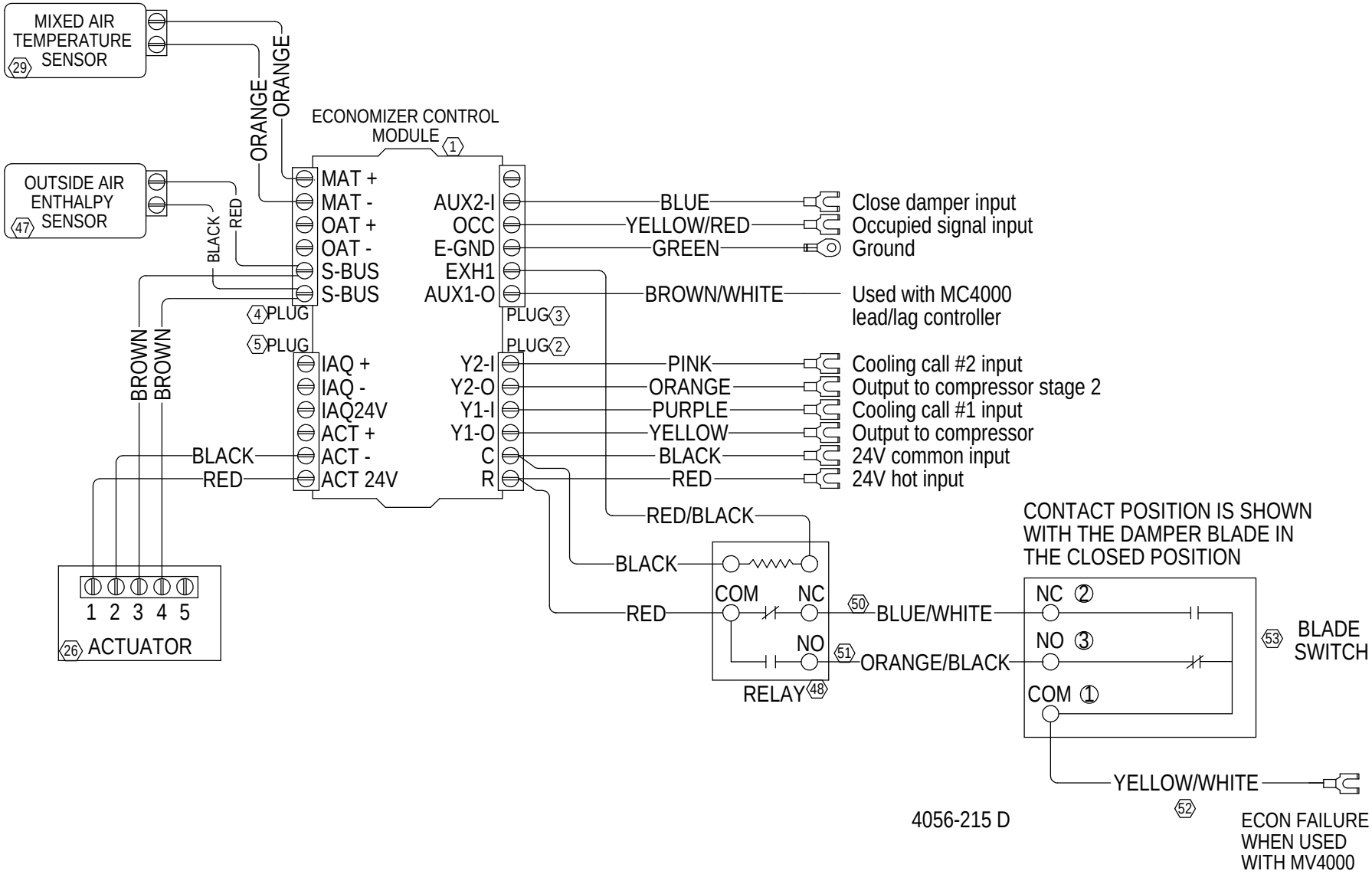

4056-215 D