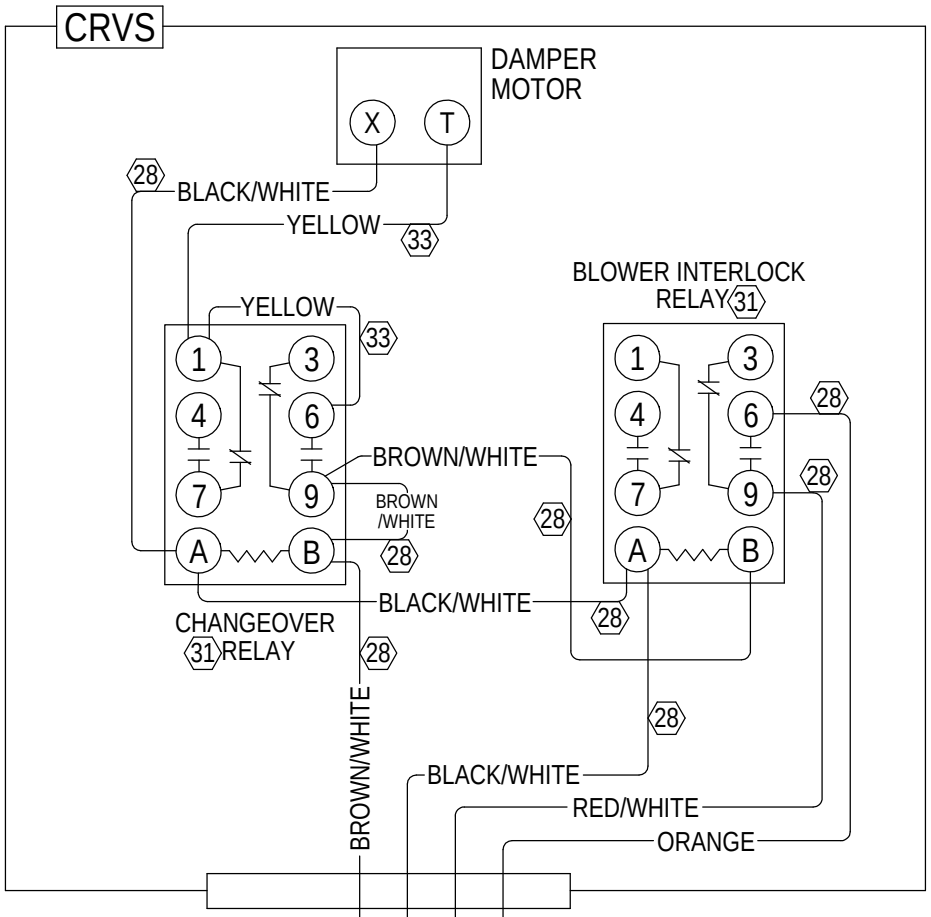

NOTE: POSITION ADJUSTMENT THUMBWHEEL IS LOCATED ON BACK OF MOTOR ABOVE THE WIRING TERMINALS

DANGER

* ELECTRICAL SHOCK HAZARD
* DISCONNECT POWER BEFORE SERVICING

4056-203 C