Literature Assembly
911-0585

Contains the following:

2100-581(D)	Installation Instructions
2100-582(E)	Low Voltage Wiring Manual
7960-667(A)	Supplemental 50H Instructions
2100-034(F)	User's Guide
2100-479	Servicing Procedures
2110-1406(G)	Replacement Parts Manual
7960-805	S8201-164 CCM Instructions
7960-420	Warranty Form

INSTALLATION INSTRUCTIONS

WALL MOUNTED PACKAGED AIR CONDITIONER

Models:

W17A2-A	W36A2-A	W48A2-A	W17L2-A	W42L2-A	W30A2DA
W18A2-A	W36A2-B	W48A2-B	W18L2-A	W42L2-B	W30A2DB
W24A2-A	W36A2-C	W48A2-C	W24L2-A	W42L2-C	W30A2DC
W24A2-B	W36A2-D	W48A2-E	W24L2-B	W42L2-F	W36A2DA
W24A2-C	W36A2-E	W48A2-F	W24L2-F	W48L2-A	W36A2DB
W24A2-D	W36A2-F	W60A2-A	W30L2-A	W48L2-B	W36A2DC
W24A2-F	W42A2-A	W60A2-B	W30L2-B	W48L2-C	W42A2DA
W30A2-A	W42A2-B	W60A2-C	W30L2-C	W48L2-F	W42A2DB
W30A2-B	W42A2-C	W60A2-E	W36L2-A	W60L2-A	W42A2DC
W30A2-C	W42A2-E	W60A2-F	W36L2-B	W60L2-B	W48A2DA
W30A2-D	W42A2-F	W70A2-A	W36L2-C	W60L2-C	W48A2DB
W30A2-F		W70A2-B	W36L2-F	W60L2-F	W48A2DC
		W70A2-C		W70L2-A	W60A2DA
		W70A2-F		W70L2-B	W60A2DB
				W70L2-C	W60A2DC
				W70L2-F	

Bard®
SINCE 1914
Climate Control Solutions

Bard Manufacturing Company, Inc.
Bryan, Ohio 43506
www.bardhvac.com

Manual: 2100-581D
Supersedes: 2100-581C
Date: 7-21-16

CONTENTS

Getting Other Information and Publications 3

Wall Mount General Information 4
Air Conditioner Wall Mount Model Nomenclature 4
Shipping Damage 4
General 4
Duct Work 5
Filters 5
Fresh Air Intake 5
Condensate Drain 5

Installation 6
Wall Mounting Information 6
Mounting the Unit 6
Clearances Required 6
Minimum Clearances 6
Wiring – Main Power 14
Wiring – Low Voltage 14

Start Up 15
General 15
Topping Off System Charge 15
Safety Practices 15
Important Installer Note 16
High Pressure Switch 16
Three Phase Scroll Compressor 16
Phase Monitor 16
Condenser Fan Operation 16
Service Hints 16
Sequence of Operation 16
Compressor Control Module 17
Pressure Service Ports 17

Service 18
Fan Blade Setting Dimensions 18
R-410A Refrigerant Charge 18
Removal of Fan Shroud 18

Figures
Figure 1 Fresh Air Damper Assembly 5
Figure 2 Unit Dimensions 7
Figure 3A Mounting Instructions – W17, 18, 24 8
Figure 3B Mounting Instructions – W30, 36 9
Figure 3C Mounting Instructions – W42, 48, 60, 70 ..10
Figure 4 Electric Heat Clearance 11
Figure 5 Wall Mounting Instructions 12
Figure 6 Wall Mounting Instructions 12
Figure 7 Common Wall Mounting Installations 13
Figure 8 Fan Blade Setting 18

Tables
Table 1 Fan Blade Dimensions 18
Table 2 Cooling Pressure 19
Table 3 Electrical Specifications W**A 20
Table 4 Electrical Specifications W**L 21
Table 5 Recommended Airflow 22
Table 6 Indoor Blower Performance 22
Table 7 Maximum ESP Electric Heat Only 22
Table 8 Electric Heat 23
Table 9A Optional Accessories – Right Hand 24
Table 9B Optional Accessories – Left Hand 25
Table 10 Vent and Control Options 26

GETTING OTHER INFORMATION AND PUBLICATIONS

These publications can help when installing the furnace. They can usually be found at the local library or purchased directly from the publisher. Be sure to consult the current edition of each standard.

National Electrical Code ..... ANSI/NFPA 70

Standard for the Installation ..... ANSI/NFPA 90A
of Air Conditioning and Ventilating Systems

Standard for Warm Air..... ANSI/NFPA 90B
Heating and Air Conditioning Systems

Load Calculation for ..... ACCA Manual J
Residential Winter and Summer Air Conditioning

Duct Design for Residential ..... ACCA Manual D
Winter and Summer Air Conditioning and Equipment Selection

For more information, contact these publishers:

ACCA **Air Conditioning Contractors of America**
1712 New Hampshire Ave. N.W.
Washington, DC 20009
Telephone: (202) 483-9370
Fax: (202) 234-4721

ANSI **American National Standards Institute**
11 West Street, 13th Floor
New York, NY 10036
Telephone: (212) 642-4900
Fax: (212) 302-1286

ASHRAE **American Society of Heating, Refrigeration and Air Conditioning Engineers, Inc.**
1791 Tullie Circle, N.E.
Atlanta, GA 30329-2305
Telephone: (404) 636-8400
Fax: (404) 321-5478

NFPA **National Fire Protection Association**
Batterymarch Park
P.O. Box 9101
Quincy, MA 02269-9901
Telephone: (800) 344-3555
Fax: (617) 984-7057

WALL MOUNT GENERAL INFORMATION

AIR CONDITIONER WALL MOUNT MODEL NOMENCLATURE

W 42 A A – A 10 X X X X X A

MODEL SERIES

CAPACITY
17 – 1½ Ton
18 – 1½ Ton
24 – 2 Ton
30 – 2½ Ton
36 – 3 Ton
42 – 3½ Ton
48 – 4 Ton
60 – 5 Ton
72**0**– 6 Ton

A – Right Hand
L – Left Hand

REVISION

SPECIALTY PRODUCTS ①
(Non-Standard)

VOLTS & PHASE
A – 230/208/60/1
B – 230/208/60/3
C – 460/60/3
D – 240/220/50/1
E – 240/220/50/3 or 220/200/50/3
F – 415/380/50/3

KW

VENTILATION OPTIONS
X – Barometric Fresh Air Damper (Standard)
B – Blank-off Plate
M – Motorized Fresh Air Damper
V – Commercial Ventilator - Motorized with Exhaust
R – Energy Recovery Ventilator - Motorized with Exhaust
S – Economizer - School Versions, Enthalpy
W – Economizer - Equipment Building, Enthalpy
T – Economizer - Equipment Building, DB Temp.

FILTER OPTIONS
X – 1" Throwaway (Standard)
W – 1" Washable
P – 2" Pleated

COLOR OPTIONS
X – Beige (Standard)
1 – White
4 – Buckeye Gray
5 – Desert Brown
8 – Dark Bronze
A – Aluminum
S – Stainless Steel

OUTLET OPTIONS
X – Front (Standard)
T – Top Outlet (W30A, W36A only)

COIL OPTIONS
X – Standard
1 – Phenolic Coated Evaporator
2 – Phenolic Coated Condenser
3 – Phenolic Coated Evaporator and Condenser

CONTROL MODULES
(See Spec. Sheet S3397)

① Insert "D" for dehumidification with hot gas reheat. Reference Form 7960-668 for complete details.

NOTE: Vent options X, B and M are without exhaust capability. May require separate field-supplied barometric relief in building.

SHIPPING DAMAGE

Upon receipt of equipment, the carton should be checked for external signs of shipping damage. If damage is found, the receiving party must contact the last carrier immediately, preferably in writing, requesting inspection by the carrier's agent.

GENERAL

The equipment covered in this manual is to be installed by trained, experienced service and installation technicians.

This appliance is not intended for use by persons (including children) with reduced physical, sensory or mental capabilities, or lack of experience and knowledge, unless they have been given supervision or instruction concerning use of the appliance by a person responsible for their safety.

Children should be supervised to ensure that they do not play with the appliance.

The refrigerant system is completely assembled and charged. All internal wiring is complete.

The unit is designed for use with or without duct work. Flanges are provided for attaching the supply and return ducts.

These instructions explain the recommended method to install the air cooled self-contained unit and the electrical wiring connections to the unit.

These instructions and any instructions packaged with any separate equipment required to make up the entire air conditioning system should be carefully read before beginning the installation. Note particularly "Starting Procedure" and any tags and/or labels attached to the equipment.

While these instructions are intended as a general recommended guide, they do not supersede any national and/or local codes in any way. Authorities having jurisdiction should be consulted before the installation is made. See Page 3 for information on codes and standards.

Size of unit for a proposed installation should be based on heat loss calculation made according to methods of Air Conditioning Contractors of America (ACCA). The air duct should be installed in accordance with the Standards of the National Fire Protection Association for the Installation of Air Conditioning and Ventilating Systems of Other Than Residence Type, NFPA No. 90A, and Residence Type Warm Air Heating and Air Conditioning Systems, NFPA No. 90B. Where local regulations are at a variance with instructions, installer should adhere to local codes.

DUCT WORK

All duct work, supply and return, must be properly sized for the design airflow requirement of the equipment. Air Conditioning Contractors of America (ACCA) is an excellent guide to proper sizing. All duct work or portions thereof not in the conditioned space should be properly insulated in order to both conserve energy and prevent condensation or moisture damage.

Refer to Maximum ESP of operation Electric Heat Table 7.

Design the duct work according to methods given by the Air Conditioning Contractors of America (ACCA). When duct runs through unheated spaces, it should be insulated with a minimum of one inch of insulation. Use insulation with a vapor barrier on the outside of the insulation. Flexible joints should be used to connect the duct work to the equipment in order to keep the noise transmission to a minimum.

Models W17 – W24 are approved for 0" clearance to the supply duct. For model series W30, W36, W42, W48, W60 and W70, a 1/4" clearance to combustible material for the first 3' of duct attached to the outlet air frame is required. See Wall Mounting Instructions and Figures 3 and 4 for further details.

Ducts through the walls must be insulated and all joints taped or sealed to prevent air or moisture entering the wall cavity.

Some installations may not require any return air duct. A metallic return air grille is required with installations not requiring a return air duct. The spacing between louvers on the grille shall not be larger than 5/8".

Any grille that meets with 5/8" louver criteria may be used. It is recommended that Bard Return Air Grille Kit RG2 through RG5 or RFG2 through RFG5 be installed when no return duct is used. Contact distributor or factory for ordering information. If using a return air filter grille, filters must be of sufficient size to allow a maximum velocity of 400 fpm.

NOTE: *If no return air duct is used, applicable installation codes may limit this cabinet to installation only in a single story structure.*

FILTERS

A 1" throwaway filter is standard with each unit. The filter slides into position making it easy to service. This filter can be serviced from the outside by removing the filter access panel. A 1" washable filter and 2" pleated filter are also available as optional accessories. The internal filter brackets are adjustable to accommodate the 2" filter by bending two (2) tabs down on each side of the filter support bracket.

FRESH AIR INTAKE

All units are built with fresh air inlet slots punched in the service door.

If the unit is equipped with a fresh air damper assembly, the assembly is shipped already attached to the unit. The damper blade is locked in the closed position. To allow the damper to operate, the maximum and minimum blade position stops must be installed (see Figure 1).

All capacity, efficiency and cost of operation information is based upon the fresh air blank-off plate in place and is recommended for maximum energy efficiency.

The blank-off plate is available upon request from the factory and is installed in place of the fresh air damper shipped with each unit.

CONDENSATE DRAIN

A plastic drain hose extends from the drain pan at the top of the unit down to the unit base. There are openings in the unit base for the drain hose to pass through. In the event the drain hose is connected to a drain system of some type, it must be an open or vented type system to assure proper drainage.

FIGURE 1
Fresh Air Damper Assembly

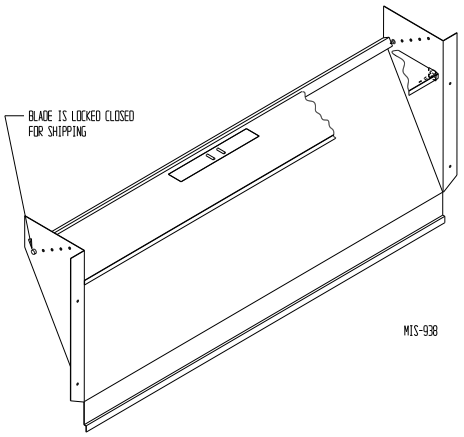

WALL MOUNTING INFORMATION

1. Two holes for the supply and return air openings must be cut through the wall as shown in Figure 3.
2. On wood frame walls, the wall construction must be strong and rigid enough to carry the weight of the unit without transmitting any unit vibration.
3. Concrete block walls must be thoroughly inspected to insure that they are capable of carrying the weight of the installed unit.

⚠ WARNING

Failure to provide the 1/4" clearance between the supply duct and a combustible surface for the first 3' of duct can result in fire causing damage, injury or death.

MOUNTING THE UNIT

1. These units are secured by wall mounting brackets which secure the unit to the outside wall surface at both sides. A bottom mounting bracket, attached to skid for shipping, is provided for ease of installation, but is not required.
2. The unit itself is suitable for 0" clearance, but the supply air duct flange and the first 3' of supply air duct require a minimum of 1/4" clearance to combustible material for model series W30, W36, W42, W48, W60 and W70. However, it is generally recommended that a 1" clearance is used for ease of installation and maintaining the required clearance to combustible material. See Figure 3 for details on opening sizes.
3. Locate and mark lag bolt locations and bottom mounting bracket location (see Figure 3).
4. Mount bottom mounting bracket.
5. Hook top rain flashing, attached to front-right of supply flange for shipping, under back bend of top.
6. Position unit in opening and secure with 5/16" lag bolts; use 7/8" diameter flat washers on the lag bolts.
7. Secure rain flashing to wall and caulk across entire length of top (see Figure 3).
8. For additional mounting rigidity, the return air and supply air frames or collars can be drilled and screwed or welded to the structural wall itself (depending upon wall construction). Be sure to observe required clearance if combustible wall.
9. On side-by-side installations, maintain a minimum of 20" clearance on right side to allow access to control panel and heat strips, and to allow proper airflow to the outdoor coil. Additional clearance may be required to meet local or national codes.

Clearances Required for Service Access and Adequate Condenser Airflow

MODELS	LEFT SIDE	RIGHT SIDE	DISCHARGE SIDE
W17A, W18A, W24A, W30A, W36A	15"	20"	10'
W17L, W18L, W24L, W30L, W36L	20"	15"	10'
W42A, W48A, W60A, W70A	20"	20"	10'
W42L, W48L, W60L, W70L	20"	20"	10'

NOTE: For side by side installation of two (2) W**A models there must be 20" between units. This can be reduced to 15" by using a W**L model (left side compressor and controls) for the left unit and WA (right side compressor and controls) for right unit.

See W**A Specification S3397 & W**L Specification S3400.

Minimum Clearances Required to Combustible Materials

MODELS	SUPPLY AIR DUCT FIRST THREE FEET	CABINET
W17A, L / W18A, L / W24A, L	0"	0"
W30A, L / W36A, L	1/4"	0"
W42A, L / W48A, L W60A, L / W70A, L	1/4"	0"

FIGURE 2

Dimensions of Basic Unit for Architectural and Installation Requirements (Nominal)

MODEL	WIDTH (W)	DEPTH (D)	HEIGHT (H)	SUPPLY		RETURN																
				A	B	C	B	E	F	G	I	J	K	L	M	N	O	P	Q	R	S	T
W17A, L W18A, L W24A, L	33.300	17.125	70.563	7.88	19.88	11.88	19.88	35.00	11.00	25.75	20.56	26.75	28.06	29.25	27.00	2.63	34.13	22.06	10.55	4.19	12.00	5.00
W30A, L W36A, L	38.200	17.125	70.563	7.88	27.88	13.88	27.88	40.00	11.00	25.75	17.93	26.75	28.75	29.25	27.00	2.75	39.19	22.75	9.14	4.19	12.00	5.00
W42A, L W48A, L W60A, L W70A, L	42.075	22.432	84.875	9.88	29.88	15.88	29.88	43.88	13.63	31.66	30.00	32.68	26.94	34.69	32.43	3.37	42.88	23.88	10.00	1.44	16.00	1.88

All dimensions are in inches. Dimensional drawings are not to scale.

WA RIGHT UNIT**

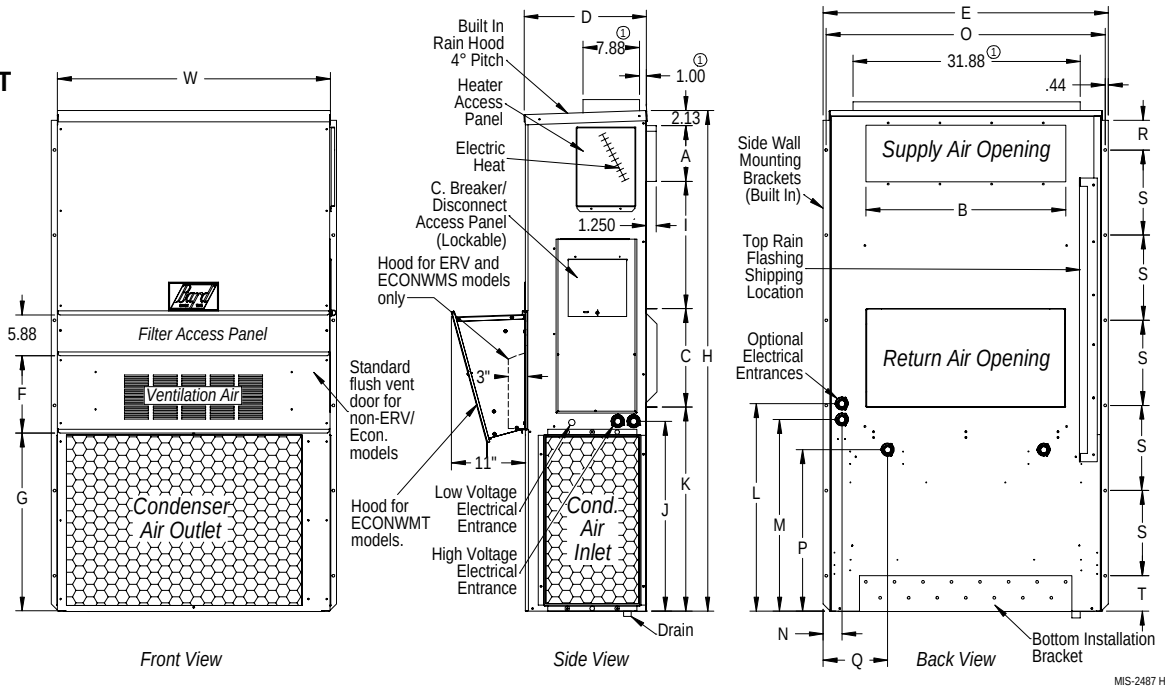

① Optional top outlet (factory installed only) for W30A and W36A models only.

WL LEFT UNIT**

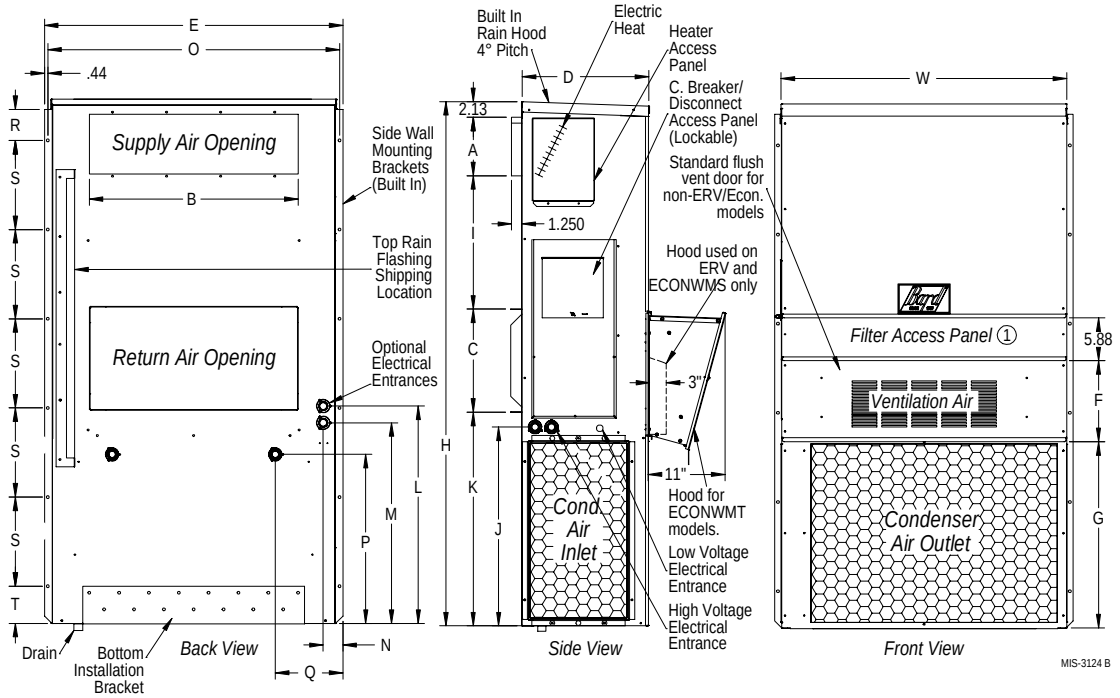

FIGURE 3A
W17A2, W17L2, W18A2, W18L2, W24A2, W24L2
Mounting Instructions

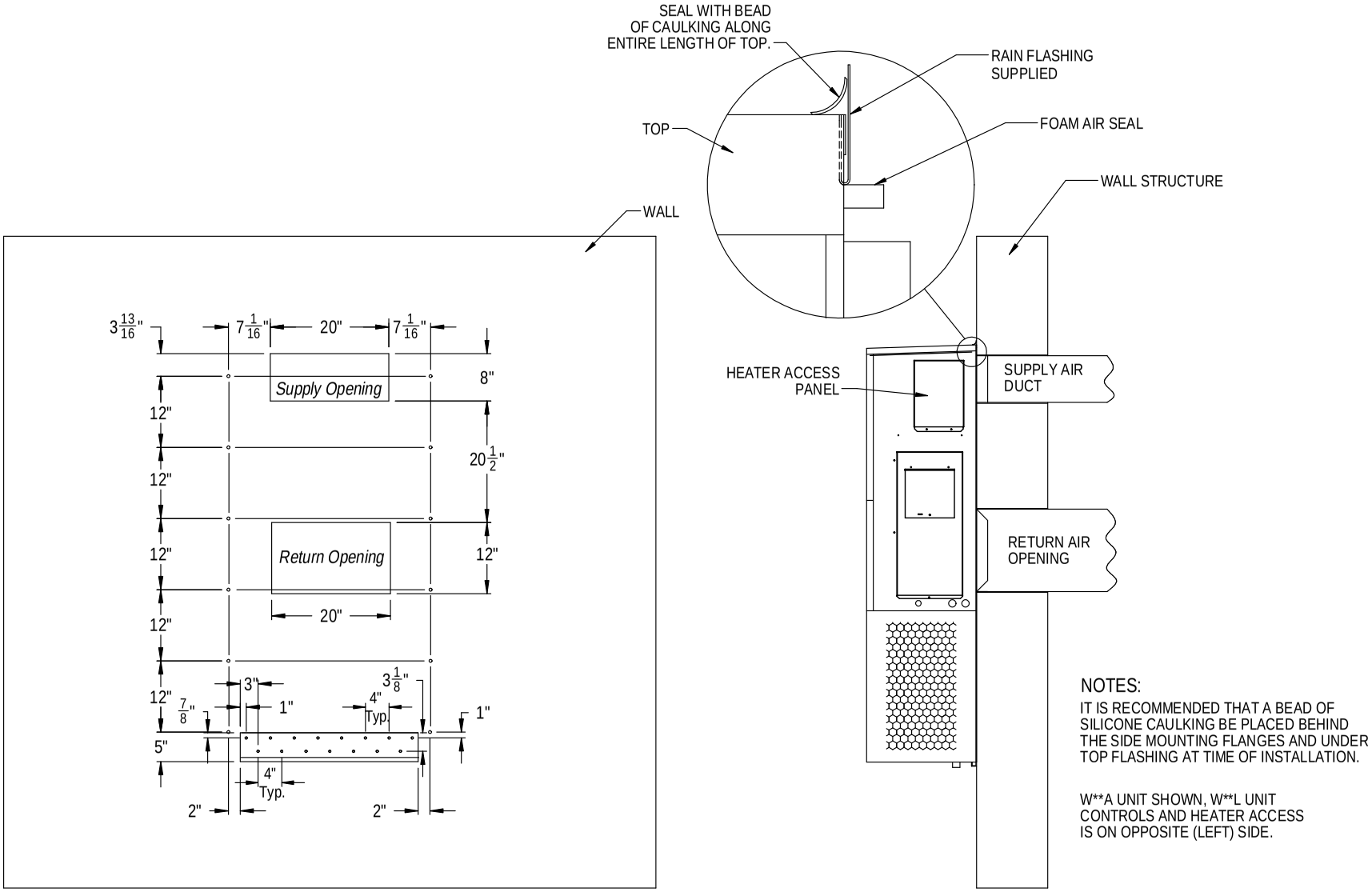

Wall Opening and Hole Location View

Right Side View

MIS-3157

FIGURE 3B
W30A2, W30L2, W36A2, W36L2
Mounting Instructions

	A	B	C	D	E
REQUIRED DIMENSIONS TO MAINTAIN 1/4" MIN. CLEARANCE FROM COMBUSTIBLE MATERIALS	28 3/8	8 3/8	5 3/8	3 11/16	17 5/8
REQUIRED DIMENSIONS TO MAINTAIN RECOMMENDED 1" CLEARANCE FROM COMBUSTIBLE MATERIALS	29 7/8	9 7/8	4 5/8	4 7/16	16 7/8

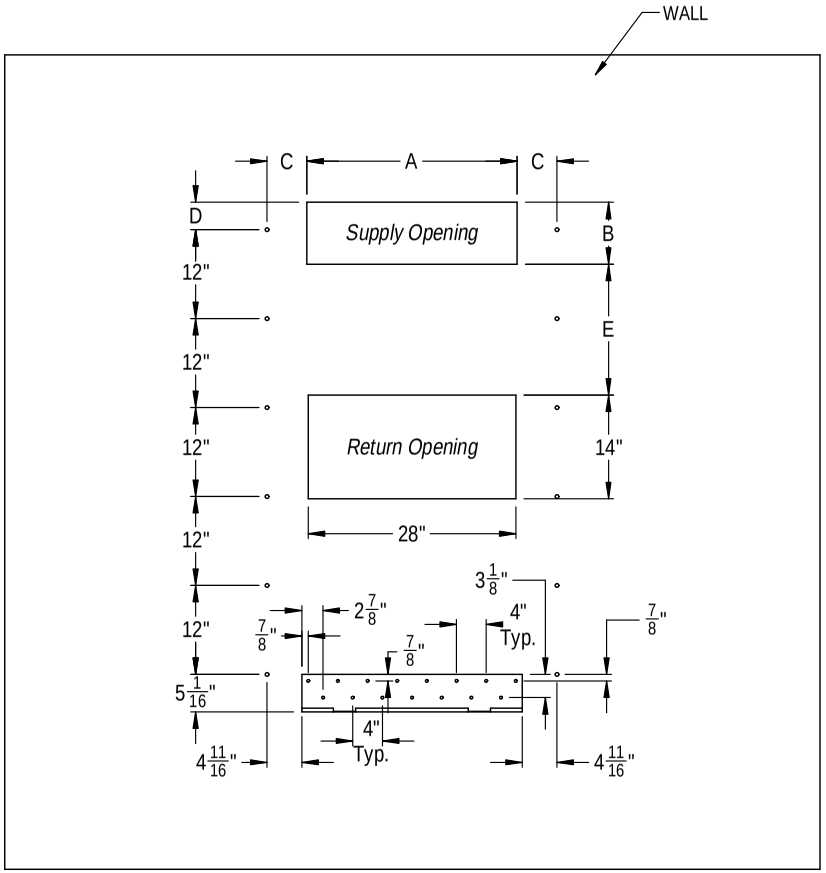

Wall Opening and Hole Location View

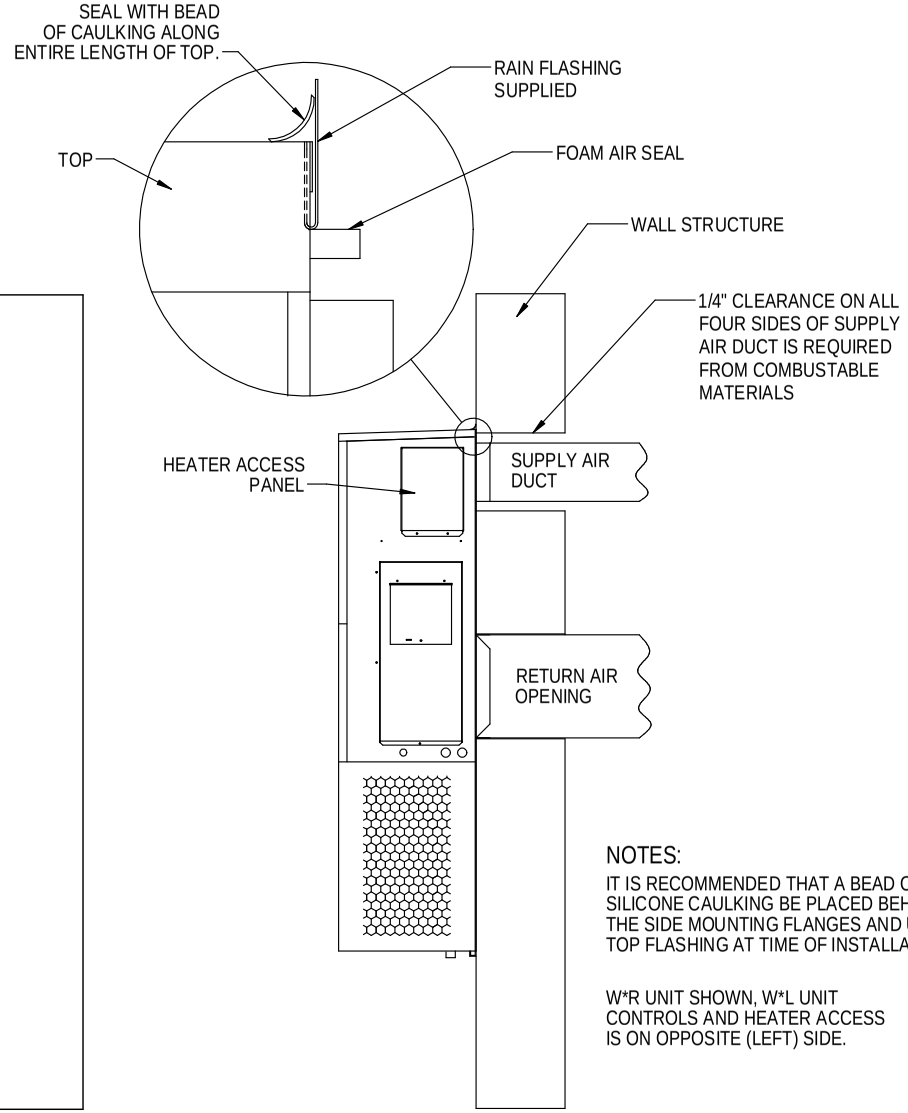

Right Side View

NOTES:

IT IS RECOMMENDED THAT A BEAD OF SILICONE CAULKING BE PLACED BEHIND THE SIDE MOUNTING FLANGES AND UNDER TOP FLASHING AT TIME OF INSTALLATION.

W*R UNIT SHOWN, W*L UNIT CONTROLS AND HEATER ACCESS IS ON OPPOSITE (LEFT) SIDE.

MIS-3158

FIGURE 3C
W42A2, W42L2, W48A2, W48L2, W60A2, W60L2, W70A2, W70L2
Mounting Instructions

	A	B	C	D	E
REQUIRED DIMENSIONS TO MAINTAIN 1/4" MIN. CLEARANCE FROM COMBUSTIBLE MATERIALS	30 1/2	10 1/2	6 1/4	1 1/4	29 3/4
REQUIRED DIMENSIONS TO MAINTAIN RECOMMENDED 1" CLEARANCE FROM COMBUSTIBLE MATERIALS	32	12	5 1/2	2	29

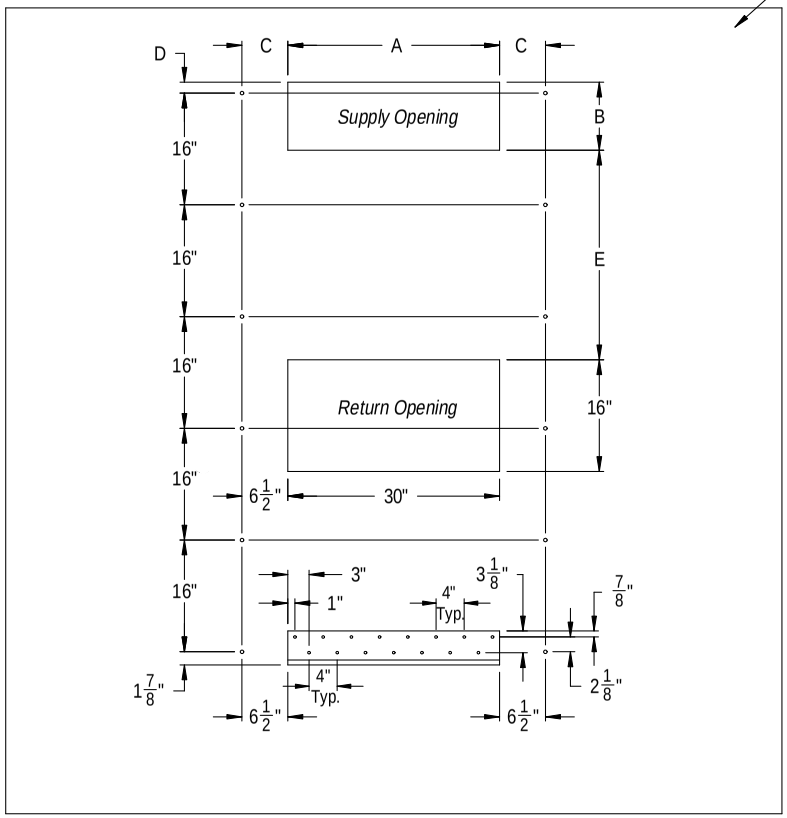

Wall Opening and Hole Location View

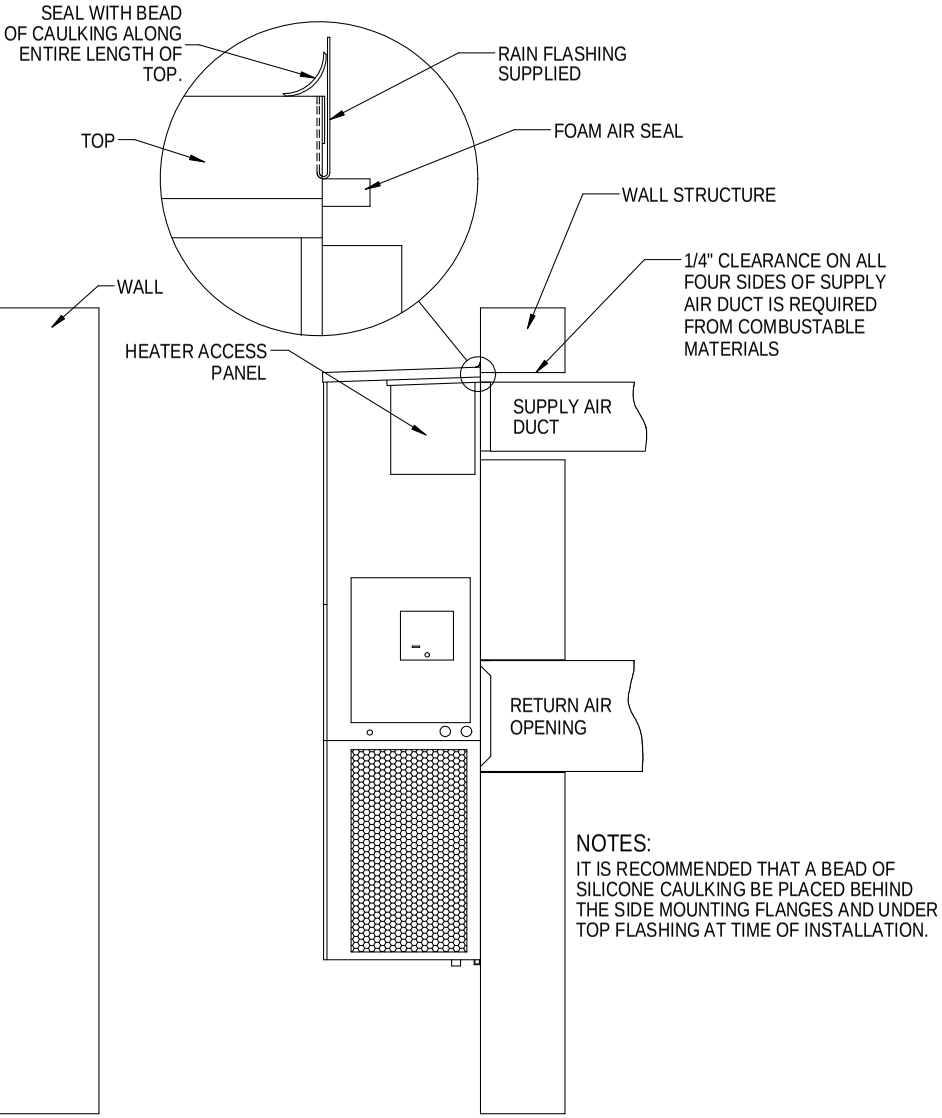

Right Side View

NOTES:
IT IS RECOMMENDED THAT A BEAD OF SILICONE CAULKING BE PLACED BEHIND THE SIDE MOUNTING FLANGES AND UNDER TOP FLASHING AT TIME OF INSTALLATION.

MIS-416 E

FIGURE 4
Electric Heat Clearance
W30A2, W30L2, W36A2, W36L2, W42A2, W42L2, W48A2, W48L2, W60A2, W60L2, W70A2, W70L2

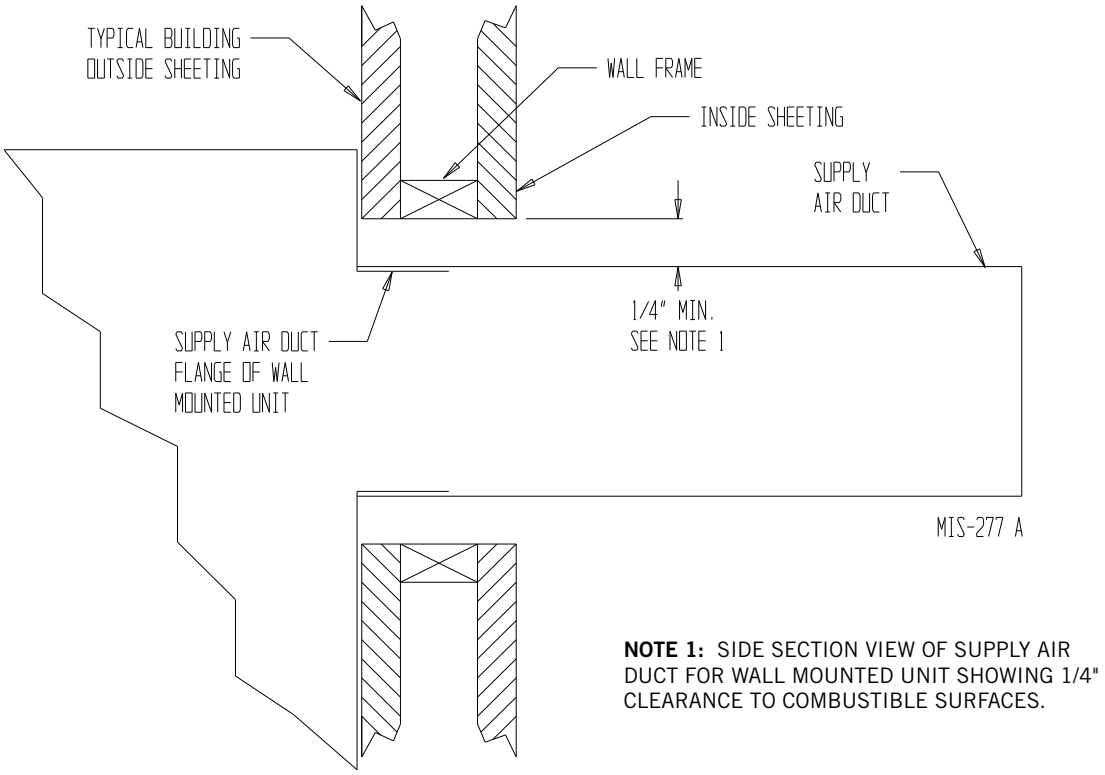

NOTE 1: SIDE SECTION VIEW OF SUPPLY AIR DUCT FOR WALL MOUNTED UNIT SHOWING 1/4" CLEARANCE TO COMBUSTIBLE SURFACES.

⚠ WARNING

A ***minimum*** of 1/4" clearance must be maintained between the supply air duct and combustible materials. This is required for the first 3' of ducting.

It is important to insure that the 1/4" minimum spacing is maintained at all points.

Failure to do this could result in overheating the combustible material and may result in a fire causing damage, injury or death.

FIGURE 5
Wall Mounting Instructions

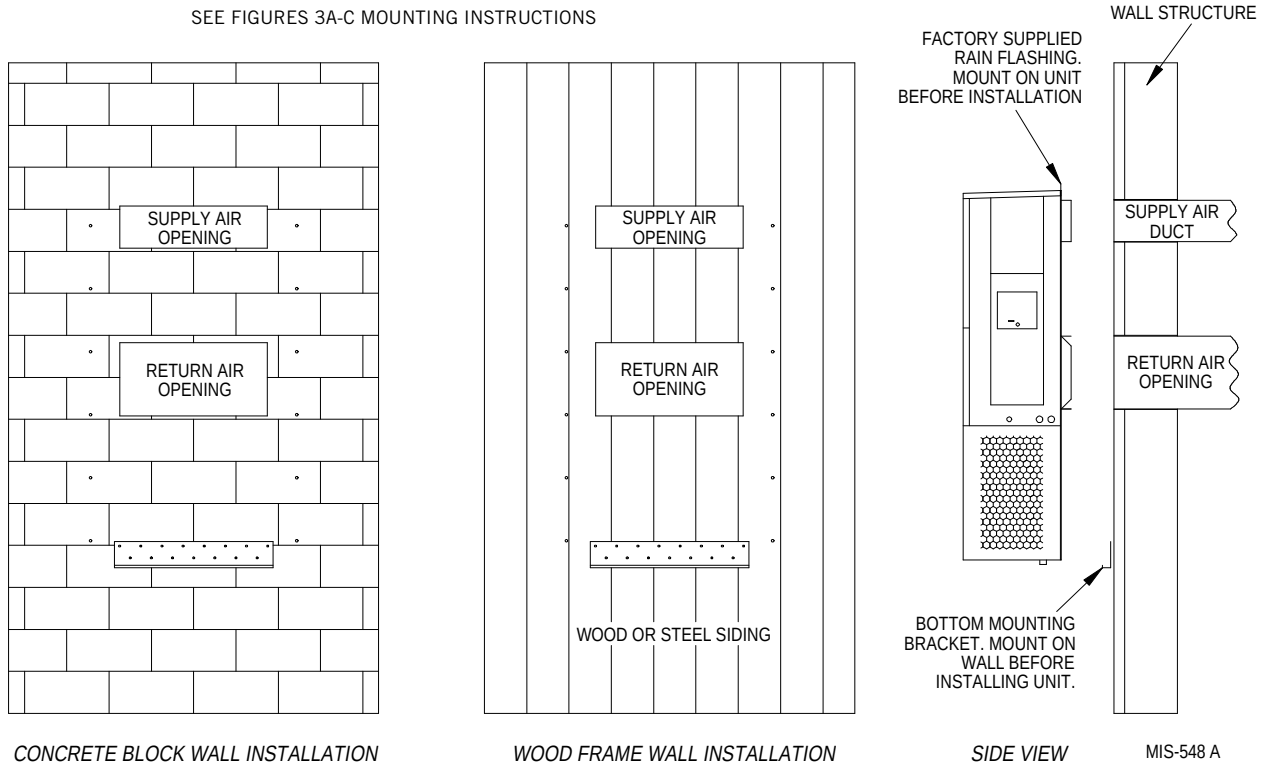

FIGURE 6
Wall Mounting Instructions

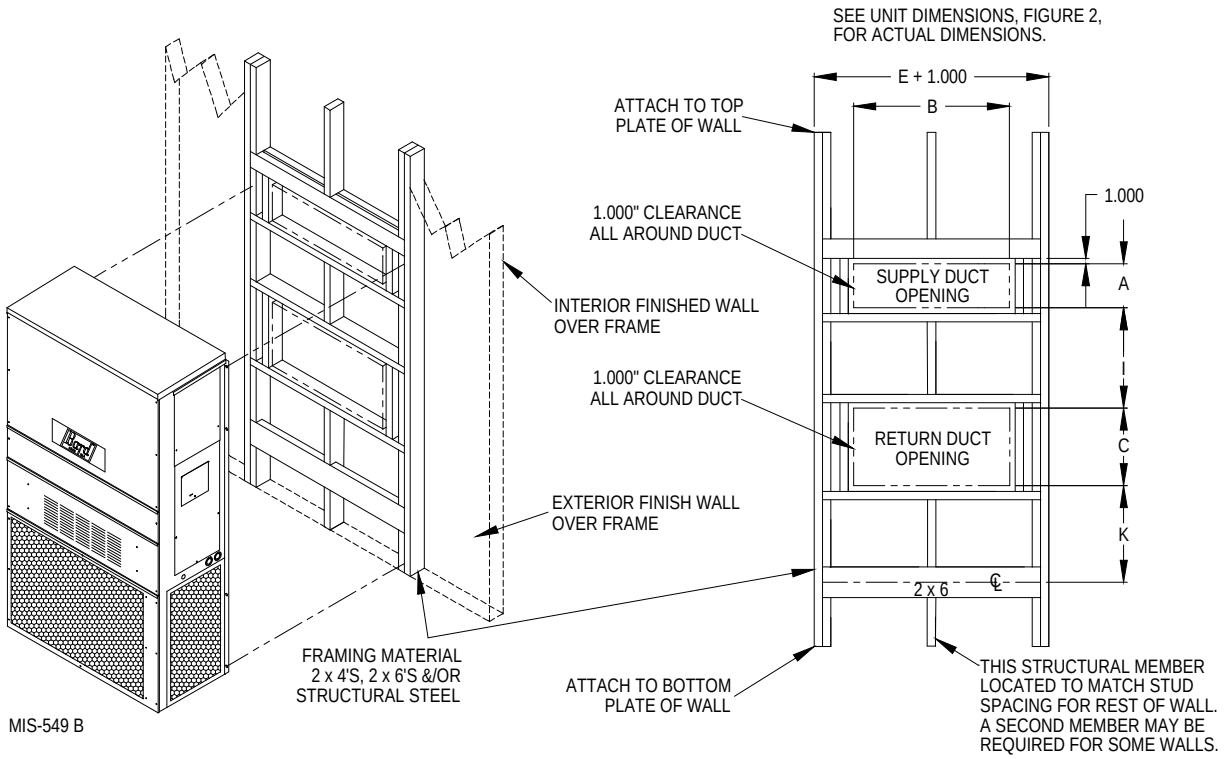

FIGURE 7
Common Wall Mounting Instructions

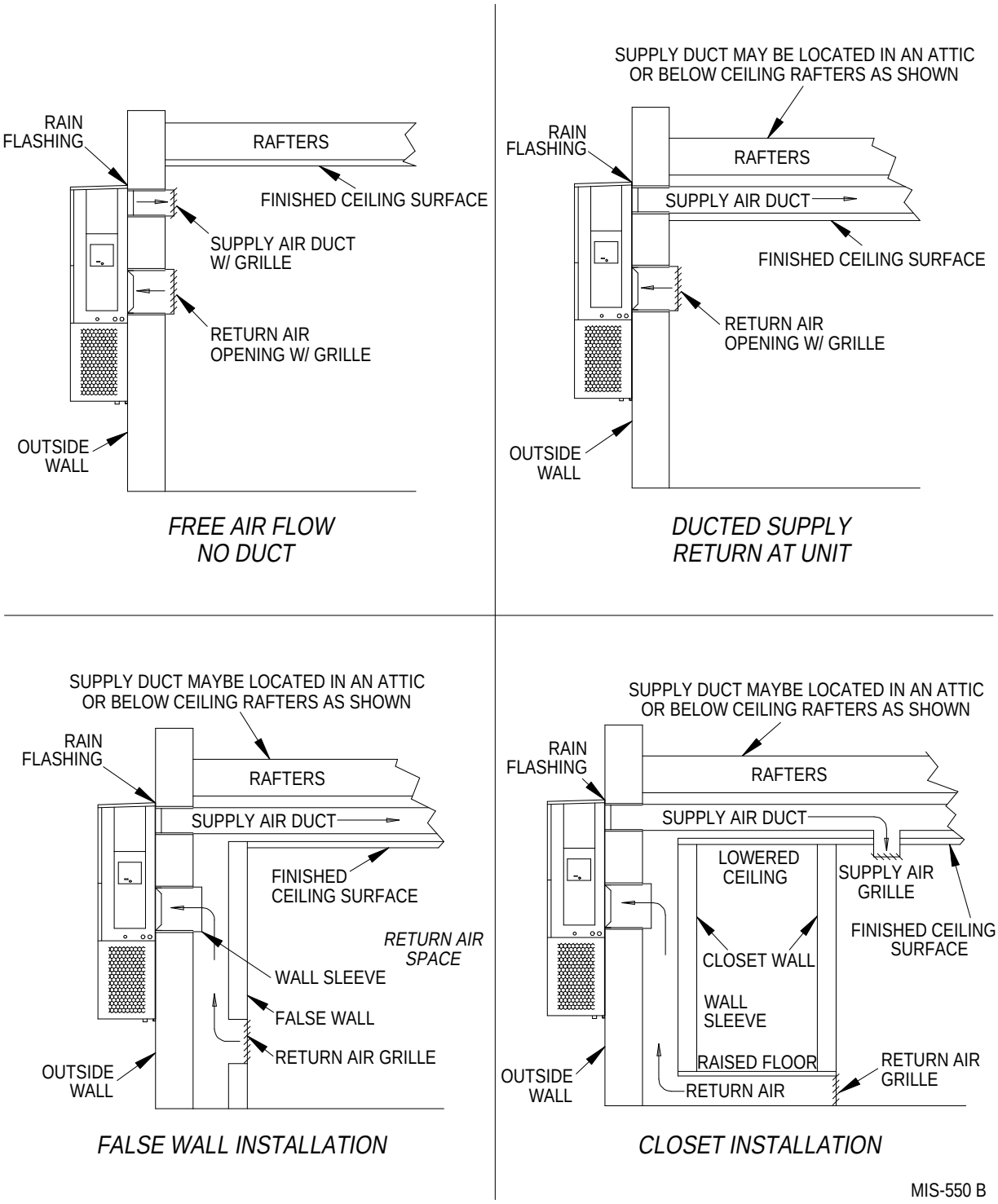

WIRING – MAIN POWER

Refer to the unit rating plate for wire sizing information and maximum fuse or circuit breaker size. Each outdoor unit is marked with a "Minimum Circuit Ampacity". This means that the field wiring used must be sized to carry that amount of current. Depending on the installed KW of electric heat, there may be two field power circuits required. If this is the case, the unit serial plate will so indicate. All models are suitable only for connection with copper wire. Each unit and/or wiring diagram will be marked "Use Copper Conductors Only". These instructions ***must be*** adhered to. Refer to the National Electrical Code (NEC) for complete current carrying capacity data on the various insulation grades of wiring material. All wiring must conform to NEC and all local codes.

The electrical data lists fuse and wire sizes (75°C copper) for all models including the most commonly used heater sizes. Also shown are the number of field power circuits required for the various models with heaters.

The unit rating plate lists a "Maximum Time Delay Relay Fuse" or circuit breaker that is to be used with the equipment. The correct size must be used for proper circuit protection and also to assure that there will be no nuisance tripping due to the momentary high starting current of the compressor motor.

The disconnect access door on this unit may be locked to prevent unauthorized access to the disconnect. To convert for the locking capability, bend the tab located in the bottom left-hand corner of the disconnect opening under the disconnect access panel straight out. This tab will now line up with the slot in the door. When shut, a padlock may be placed through the hole in the tab preventing entry.

See "Start Up" section for important information on three phase scroll compressor start ups.

See Tables 3 and 4 for Electrical Specifications.

WIRING – LOW VOLTAGE

All 230/208V 1 phase and 3 phase equipment have dual primary voltage transformers. All equipment leaves the factory wired on 240V tap. For 208V operation, reconnect from 240V to 208V tap. The acceptable operating voltage range for the 240 and 208V taps are:

TAP	RANGE
240	253 – 216
208	220 – 187

NOTE: *The voltage should be measured at the field power connection point in the unit and while the unit is operating at full load (maximum amperage operating condition).*

For wiring size and connections, refer to wiring manual 2100-582.

THESE UNITS REQUIRE R-410A REFRIGERANT AND POLYOL ESTER OIL.

GENERAL

1. Use separate service equipment to avoid cross contamination of oil and refrigerants.
2. Use recovery equipment rated for R-410A refrigerant.
3. Use manifold gauges rated for R-410A (800 psi/250 psi low).
4. R-410A is a binary blend of HFC-32 and HFC-125.
5. R-410A is nearly azeotropic—similar to R-22 and R-12. Although nearly azeotropic, charge with liquid refrigerant.
6. R-410A operates at 40-70% higher pressure than R-22 and systems designed for R-22 cannot withstand this higher pressure.
7. R-410A has an ozone depletion potential of zero, but must be reclaimed due to its global warming potential.
8. R-410A compressors use Polyol Ester oil.
9. Polyol Ester oil is hygroscopic; it will rapidly absorb moisture and strongly hold this moisture in the oil.
10. A liquid line dryer must be used—even a deep vacuum will not separate moisture from the oil.
11. Limit atmospheric exposure to 15 minutes.
12. If compressor removal is necessary, always plug compressor immediately after removal. Purge with small amount of nitrogen when inserting plugs.

TOPPING OFF SYSTEM CHARGE

If a leak has occurred in the system, Bard Manufacturing recommends reclaiming, evacuating (see criteria above) and charging to the nameplate charge. If done correctly, topping off the system charge can be done without problems.

With R-410A, there are no significant changes in the refrigerant composition during multiple leaks and recharges. R-410A refrigerant is close to being an azeotropic blend (it behaves like a pure compound or single component refrigerant). The remaining refrigerant charge, in the system, may be used after leaks have occurred and then "top-off" the charge by utilizing the pressure charts on the inner control panel cover as a guideline.

REMEMBER: *When adding R-410A refrigerant, it must come out of the charging cylinder/tank as a liquid to avoid any fractionation, and to ensure optimal system performance. Refer to instructions for the cylinder that is being utilized for proper method of liquid extraction.*

⚠ WARNING

Failure to conform to these practices could lead to damage, injury or death.

SAFETY PRACTICES

1. Never mix R-410A with other refrigerants.
2. Use gloves and safety glasses. Polyol Ester oils can be irritating to the skin, and liquid refrigerant will freeze the skin.
3. Never use air and R-410A to leak check; the mixture may become flammable.
4. Do not inhale R-410A—the vapor attacks the nervous system, creating dizziness, loss of coordination and slurred speech. Cardiac irregularities, unconsciousness and ultimate death can result from breathing this concentration.
5. Do not burn R-410A. This decomposition produces hazardous vapors. Evacuate the area if exposed.
6. Use only cylinders rated DOT4BA/4BW 400.
7. Never fill cylinders over 80% of total capacity.
8. Store cylinders in a cool area, out of direct sunlight.
9. Never heat cylinders above 125°F.
10. Never trap liquid R-410A in manifold sets, gauge lines or cylinders. R-410A expands significantly at warmer temperatures. Once a cylinder or line is full of liquid, any further rise in temperature will cause it to burst.

IMPORTANT INSTALLER NOTE

For improved start up performance wash the indoor coil with a dish washing detergent.

HIGH PRESSURE SWITCH

All W**A/W**L wall mounted air conditioner series models are supplied with a remote reset for the high and low pressure switch. If tripped, this pressure switch may be reset by turning the thermostat off then back on again.

THREE PHASE SCROLL COMPRESSOR START UP INFORMATION

Scroll compressors, like several other types of compressors, will only compress in one rotational direction. Direction of rotation is not an issue with single phase compressors since they will always start and run in the proper direction.

However, three phase compressors will rotate in either direction depending upon phasing of the power. Since there is a 50-50 chance of connecting power in such a way as to cause rotation in the reverse direction, verification of proper rotation must be made. Verification of proper rotation direction is made by observing that suction pressure drops and discharge pressure rises when the compressor is energized. Reverse rotation also results in an elevated sound level over that with correct rotation, as well as substantially reduced current draw compared to tabulated values.

Verification of ***proper rotation*** must be made at the time the equipment is put into service. If improper rotation is corrected at this time, there will be no negative impact on the durability of the compressor. However, reverse operation for over 1 hour may have a negative impact on the bearing due to oil pump out.

NOTE: *If compressor is allowed to run in reverse rotation for an extended period of time, the compressor's internal protector will trip.*

All three phase compressors are wired identically internally. As a result, once the correct phasing is determined for a specific system or installation, connecting properly phased power leads to the same Fusite terminal should maintain proper rotation direction.

The direction of rotation of the compressor may be changed by reversing any two line connections to the unit.

PHASE MONITOR

All units with three phase scroll compressors are equipped with a three phase line monitor to prevent compressor damage due to phase reversal.

The phase monitor in this unit is equipped with two LEDs. If the Y signal is present at the phase monitor and phases are correct the green LED will light.

If phases are reversed, the red fault LED will be lit and compressor operation is inhibited.

If a fault condition occurs, reverse two of the supply leads to the unit. ***Do not reverse any of the unit factory wires as damage may occur.***

CONDENSER FAN OPERATION

NOTE: *Certain models may be equipped with a low ambient control (LAC), and if so equipped, the condenser fan motor will have delayed start until system refrigerant operating pressure builds up. After starting, the fan motor may or may not cycle depending upon ambient conditions. This is normal operation.*

Applies to W42, W48, W60 and W70 models only. The condenser fan motor on 230/208 volt one and three phase 60 HZ units is a two-speed motor that comes factory wired on high speed for peak performance. If ambient conditions permit, it can be reconnected to low speed (red wire) for lower sound level (see wiring diagram).

50 HZ models must have fan wired on low speed. These models are factory wired on low speed.

SERVICE HINTS

1. Caution owner/operator to maintain clean air filters at all times and also not to needlessly close off supply and return air registers. This reduces airflow through the system, which shortens equipment service life as well as increasing operating costs.
2. Check all power fuses or circuit breakers to be sure they are the correct rating.
3. Periodic cleaning of the outdoor coil to permit full and unrestricted airflow circulation is essential.

SEQUENCE OF OPERATION

COOLING – Circuit R-Y makes at thermostat pulling in compressor contactor, starting the compressor and outdoor motor. (See ***NOTE*** under **Condenser Fan Operation** if equipped with low ambient control.) The G (indoor motor) circuit is automatically completed by the thermostat on any call for cooling operation or can be energized by manual fan switch on subbase for constant air circulation. On a call for heating, circuit R-W1 make at the thermostat pulling in heat contactor for the strip heat and blower operation. On a call for second stage heat, R-W2 makes bringing on second heat contactor, if so equipped.

COMPRESSOR CONTROL MODULE

The compressor control module is standard on all models covered by this manual. The compressor control module is an anti-short cycle/lockout timer with high and low pressure switch monitoring and alarm relay output.

Adjustable Delay-on-Make And Delay-on-Break Timer

On initial power up or anytime power is interrupted to the unit, the *delay-on-make* period begins, which will be 2 minutes plus 10% of the *delay-on-break* setting. When the delay-on-make is complete and the high pressure switch and low pressure switch are closed, the compressor contactor is energized. Upon shutdown, the delay-on-break timer starts and prevents restart until the delay-on-break and delay-on-make periods have expired.

During routine operation of the unit with no power interruptions, the compressor will operate on demand with no delay.

High Pressure Switch and Lockout Sequence

If the high pressure switch opens, the compressor contactor will de-energize immediately. The lockout timer will go into a *soft lockout* and stay in soft lockout until the high pressure switch closes and the delay-on-break time has expired. If the high pressure switch opens again in this same operating cycle, the unit will go into *manual lockout* condition and the alarm relay circuit will energize. Recycling the wall thermostat resets the manual lockout.

Low Pressure Switch, Bypass and Lockout Sequence

If the low pressure switch opens for more than 120 seconds, the compressor contactor will de-energize and go into a soft lockout. Regardless the state of the low pressure switch, the contactor will re-energize after the delay-on-make time delay has expired. If the low pressure switch remains open, or opens again for longer than 120 seconds, the unit will go into manual lockout condition and the alarm relay circuit will energize. Recycling the wall thermostat resets the manual lockout.

Alarm Relay Output

Alarm terminal is output connection for applications where alarm relay is employed. This terminal is powered whenever the compressor is locked out due to HPC or LPC sequences as described.

NOTE: *Both high and low pressure switch controls are inherently automatic reset devices. The high pressure switch and low pressure switch cut out and cut in settings are fixed by specific air conditioner unit model. The lockout features, both soft and manual, are a function of the compressor control module.*

ADJUSTMENTS

Adjustable Delay-on-Make and Delay-on-Break Timer

The potentiometer is used to select delay-on-break time from 30 seconds to 5 minutes. Delay-on-make (DOM) timing on power-up and after power interruptions is equal to 2 minutes plus 10% of delay-on-break (DOB) setting:

0.5 minute (30 seconds) DOB = 123 second DOM
1.0 minute (60 seconds) DOB = 126 second DOM
2.0 minute (120 seconds) DOB = 132 second DOM
3.0 minute (180 seconds) DOB = 138 second DOM
4.0 minute (240 seconds) DOB = 144 second DOM
5.0 minute (300 seconds) DOB = 150 second DOM

During routine operation of the unit with no power interruptions, the compressor will operate on demand with no delay.

Typical Settings for Dual Unit Installation:

Unit 1: DOB set at 2 minutes and DOM is 132 seconds

Unit 2: DOB set at 4 minutes and DOM is 144 seconds

PRESSURE SERVICE PORTS

High and low pressure service ports are installed on all units so that the system operating pressures can be observed. A pressure table can be found later in the manual covering all models. It is imperative to match the correct pressure table to the unit by model number. See Table 2.

This unit employs high-flow Coremax valves instead of the typical Shrader type valves.

WARNING! Do NOT use a Schrader valve core removal tool with these valves. Use of such a tool could result in eye injuries or refrigerant burns!

To change a Coremax valve without first removing the refrigerant, a special tool is required which can be obtained at www.fastestinc.com/en/SCCA07H. See the replacement parts manual for replacement core part numbers.

FAN BLADE SETTING DIMENSIONS

Shown in Figure 8 is the correct fan blade setting for proper air delivery across the outdoor coil. Refer to Table 1 for unit specific dimension.

Any service work requiring removal or adjustment in the fan and/or motor area will require that the dimensions below be checked and blade adjusted in or out on the motor shaft accordingly.

FIGURE 8
Fan Blade Setting

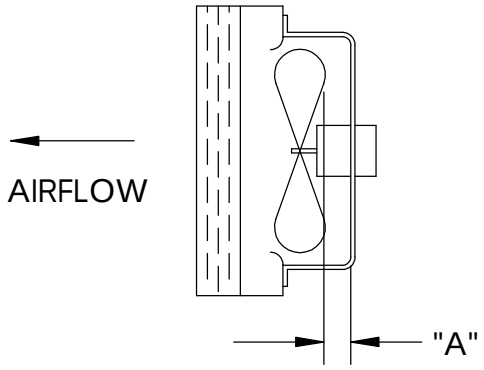

MIS-1724

TABLE 1
Fan Blade Dimension

Model	Dimension A
W17A2 / W17L2 W18A2 / W18L2 W24A2 / W24L2	1.00"
W30A2 / W30L2 W36A2 / W36L2	1.25"
W42A2 / W42L2 W48A2 / W48L2 W60A2 / W60L2 W70A2 / W70L2	1.75"

R-410A REFRIGERANT CHARGE

This unit was charged at the factory with the quantity of refrigerant listed on the serial plate. AHRI capacity and efficiency ratings were determined by testing with this refrigerant charge quantity.

The following pressure table shows nominal pressures for the units. Since many installation specific situations can affect the pressure readings, this information should only be used by certified technicians as a guide for evaluating proper system performance. They shall not be used to adjust charge. If charge is in doubt, reclaim, evacuate and recharge the unit to the serial plate charge.

REMOVAL OF FAN SHROUD

1. Disconnect all power to the unit.
2. Remove the screws holding both grilles, one on each side of unit, and remove grilles.
3. Remove nine (9) screws holding fan shroud to condenser and bottom.
4. Unwire condenser fan motor.
5. Slide complete motor, fan blade, and shroud assembly out the left side of the unit.
6. Service motor/fan as needed.
7. Reverse steps to reinstall.

TABLE 2
Cooling Pressure

Air Temperature Entering Outdoor Coil °F

Model	Return Air Temp (DB/WB)	Pressure	75	80	85	90	95	100	105	110	115	120
W17A/L	75/62	Low Side	124	126	128	130	132	133	135	137	138	140
		High Side	321	340	362	384	409	434	461	490	521	553
	80/67	Low Side	133	135	137	139	141	142	144	146	148	150
		High Side	329	349	371	394	419	445	473	503	534	567
	85/72	Low Side	138	140	142	144	146	147	149	151	153	155
		High Side	341	361	384	408	434	461	490	521	553	587
W18A/L	75/62	Low Side	127	129	131	133	135	137	138	140	143	145
		High Side	318	339	362	385	409	434	459	486	513	541
	80/67	Low Side	136	138	140	142	144	146	148	150	153	155
		High Side	326	348	371	395	419	445	471	498	526	555
	85/72	Low Side	141	143	145	147	149	151	153	155	158	160
		High Side	337	360	384	409	434	461	487	515	544	574
W24A/L	75/62	Low Side	119	121	122	124	127	129	131	133	135	137
		High Side	340	361	383	407	432	459	488	518	550	583
	80/67	Low Side	127	129	131	133	136	138	140	142	144	146
		High Side	349	370	393	417	443	471	500	531	564	598
	85/72	Low Side	131	134	136	138	141	143	145	147	149	151
		High Side	361	383	407	432	459	487	518	550	584	619
W30A/L	75/62	Low Side	122	124	127	129	131	133	135	137	137	139
		High Side	335	358	381	406	431	456	483	509	536	565
	80/67	Low Side	130	133	136	138	140	142	144	146	147	149
		High Side	344	367	391	416	442	468	495	522	550	579
	85/72	Low Side	135	138	141	143	145	147	149	151	152	154
		High Side	356	380	405	431	457	484	512	540	569	599
W36A/L	75/62	Low Side	120	122	124	126	129	130	132	134	135	136
		High Side	339	366	392	418	446	473	501	529	558	586
	80/67	Low Side	128	130	133	135	138	139	141	143	144	145
		High Side	348	375	402	429	457	485	514	543	572	601
	85/72	Low Side	132	135	138	140	143	144	146	148	149	150
		High Side	360	388	416	444	473	502	532	562	592	622
W42A/L	75/62	Low Side	123	124	126	128	130	132	134	136	137	139
		High Side	320	342	367	391	416	443	469	496	526	554
	80/67	Low Side	132	133	135	137	139	141	143	145	147	149
		High Side	328	351	376	401	427	454	481	509	539	568
	85/72	Low Side	137	138	140	142	144	146	148	150	152	154
		High Side	339	363	389	415	442	470	498	527	558	588
W48A/L	75/62	Low Side	117	119	121	123	125	127	129	131	133	135
		High Side	355	378	403	427	454	482	510	539	570	603
	80/67	Low Side	125	127	129	132	134	136	138	140	142	144
		High Side	364	388	413	438	466	494	523	553	585	618
	85/72	Low Side	129	131	134	137	139	141	143	145	147	149
		High Side	377	402	427	453	482	511	541	572	605	640
W60A/L	75/62	Low Side	122	124	126	128	130	131	133	135	137	138
		High Side	346	371	396	421	447	473	499	526	553	580
	80/67	Low Side	131	133	135	137	139	140	142	144	146	148
		High Side	355	380	406	432	458	485	512	539	567	595
	85/72	Low Side	136	138	140	142	144	145	147	149	151	153
		High Side	367	393	420	447	474	502	530	558	587	616
W70A/L	75/62	Low Side	118	121	122	123	125	127	129	131	132	134
		High Side	349	371	395	419	444	470	497	525	553	583
	80/67	Low Side	126	129	131	132	134	136	138	140	141	143
		High Side	358	381	405	430	455	482	510	538	567	598
	85/72	Low Side	130	134	136	137	139	141	143	145	146	148
		High Side	371	394	419	445	471	499	528	557	587	619

Low side pressure ± 4 PSIG
High side pressure ± 10 PSIG

Tables are based upon rated CFM (airflow) across the evaporator coil. If there is any doubt as to correct operating charge being in the system, the charge should be removed, system evacuated and recharged to serial plate charge weight.

NOTE: Pressure table based on high speed condenser fan operation. If condensing pressures appear elevated check condenser fan wiring. See "Condenser Fan Operation".

TABLE 3

*Electrical Specifications – W**A Series*

MODEL	Rated Volts & Phase	No. Field Power Circuits	Single Circuit				Dual Circuit							
			③ Minimum Circuit Ampacity	① Maximum External Fuse or Ckt. Brkr.	② Field Power Wire Size	② Ground Wire	③ Minimum Circuit Ampacity		① Maximum External Fuse or Ckt. Breaker		② Field Power Wire Size		② Ground Wire Size	
							Ckt. A	Ckt. B	Ckt. A	Ckt. B	Ckt. A	Ckt. B	Ckt. A	Ckt. B
W17, 18A2-A00,A0Z	230/208-1	1	16	20	12	12								
A05		1	30	30	10	10								
A08		1	46	50	8	10								
A10		1	56	60	6	10								
W24A2-A00, A0Z	230/208-1	1	21	30	10	10								
A04		1	25	30	10	10								
A05		1	30	30	10	10								
A08		1	46	50	8	10								
A10		1	56	60	6	10								
W24A2-B00, B0Z	230/208-3	1	15	20	12	12								
B06		1	22	25	10	10								
W24A2-C00, C0Z	460-3	1	9	15	14	14								
C06		1	11	15	14	14								
W30A2-A00*, A0Z*	230/208-1	1	24	35	8	10								
A05*		1	32	35	8	10								
A08		1	47	50	8	10								
A10*		1	58	60	6	10								
A15		1 or 2	84	90	4	8	58	26	60	30	6	10	10	10
W30A2-B00*, B0Z*	230/208-3	1	18	20	12	12								
B06		1	24	25	10	10								
B09*		1	33	35	8	10								
B15		1	51	60	6	10								
W30A2-C00*, C0Z*	460-3	1	11	15	14	14								
C06		1	12	15	14	14								
C09*		1	17	20	12	12								
C15		1	26	30	10	10								
W36A2-A00*, A0Z*	230/208-1	1	29	35	8	10								
A05*		1	32	35	8	10								
A08		1	47	50	8	10								
A10*		1	58	60	6	10								
A15		1 or 2	84	90	4	8	58	26	60	30	6	10	10	10
W36A2-B00*, B0Z*	230/208-3	1	23	30	10	10								
B06*		1	24	30	10	10								
B09*		1	33	35	8	10								
B15		1	51	60	6	10								
W36A2-C00*, C0Z*	460-3	1	11	15	14	14								
C06*		1	12	15	14	14								
C09*		1	16	20	12	12								
C15		1	26	30	10	10								
W42A2-A00, A0Z	230/208-1	1	32	50	8	10								
A05		1	32	50	8	10								
A10		1	58	60	6	10								
A15		1 or 2	84	90	4	8	58	26	60	30	6	10	10	10
A20		1 or 2	110	125	2	6	58	52	60	60	6	6	10	10
W42A2-B00, B0Z	230/208-3	1	24	35	8	10								
B09		1	33	35	8	10								
B15		1	51	60	6	10								
B18		1	60	60	6	10								
W42A2-C00, C0Z	460-3	1	12	15	14	14								
C09		1	17	20	12	12								
C15		1	26	30	10	10								
W48A2-A00, A0Z	230/208-1	1	39	50	8	10								
A05		1	39	50	8	10								
A10		1	58	60	6	10								
A15		1 or 2	84	90	4	8	58	26	60	30	6	10	10	10
A20		1 or 2	110	125	2	6	58	52	60	60	6	6	10	10
W48A2-B00, B0Z	230/208-3	1	27	40	8	10								
B09		1	33	40	8	10								
B15		1	51	60	6	10								
B18		1	60	60	6	10								
W48A2-C00, C0Z	460-3	1	13	20	12	12								
C09		1	17	20	12	12								
C15		1	26	30	10	10								
W60A2-A00, A0Z	230/208-1	1	42	60	8	10								
A05		1	42	60	8	10								
A10		1	60	60	6	10								
A15		1 or 2	86	90	3	8	60	26	60	30	6	10	10	10
A20		1 or 2	112	125	2	6	60	52	60	60	6	6	10	10
W60A2-B00, B0Z	230/208-3	1	28	40	8	10								
B09		1	35	40	8	10								
B15		1	53	60	6	10								
B18		2	N/A	N/A	N/A	N/A	35	28	40	30	8	10	10	10
W60A2-C00, C0Z	460-3	1	15	20	12	12								
C09		1	18	20	12	12								
C15		1	27	30	10	10								
W70A2-A00, A0Z	230/208-1	1	56	60	6	10								
A05		1	56	60	6	10								
A10		1	59	60	6	10								
A15		1 or 2	85	90	4	8	59	26	60	30	6	10	10	10
A20		1 or 2	111	125	2	6	59	52	60	60	6	6	10	10
W70A2-B00, B0Z	230/208-3	1	38	60	8	10								
B09		1	38	60	8	10								
B15		1	53	60	6	10								
B18		2	N/A	N/A	N/A	N/A	38	28	60	30	8	10	10	10
W70A2-C00, C0Z	460-3	1	19	30	10	10								
C09		1	19	30	10	10								
C15		1	27	35	18	10								

① Maximum size of the time delay fuse or circuit breaker for protection of field wiring conductors.
② Based on 75C copper wire. All wiring must conform to the National Electrical Code and all local codes.
③ These "Minimum Circuit Ampacity" values are to be used for sizing the field power conductors. Refer to the National Electrical code (latest version), Article 310 for power conductor sizing. **Caution:** When more than one field power circuit is run through one conduit, the conductors must be derated. Pay special attention to note 8 of Table 310 regarding Ampacity Adjustment Factors when more than three (3) current carrying conductors are in a raceway.
* Top outlet supply option is available only factory installed and only on the selected models.
IMPORTANT: While this electrical data is presented as a guide, it is important to electrically connect properly sized fuses and conductor wires in accordance with the National Electrical Code and all local codes.

TABLE 4

*Electrical Specifications – W**L Series*

MODEL	Rated Volts & Phase	No. Field Power Circuits	Single Circuit				Dual Circuit							
			③ Minimum Circuit Ampacity	① Maximum External Fuse or Ckt. Brkr.	② Field Power Wire Size	② Ground Wire	③ Minimum Circuit Ampacity		① Maximum External Fuse or Ckt. Breaker		② Field Power Wire Size		② Ground Wire Size	
							Ckt. A	Ckt. B	Ckt. A	Ckt. B	Ckt. A	Ckt. B	Ckt. A	Ckt. B
W17, 18L2-A00,A0Z	230/208-1	1	16	20	12	12								
A05		1	30	30	10	10								
A08		1	46	50	8	10								
A10		1	56	60	6	10								
W24L2-A00, A0Z	230/208-1	1	21	30	10	10								
A05		1	30	30	10	10								
A08		1	46	50	8	10								
A10		1	56	60	6	10								
W24L2-B00, B0Z	230/208-3	1	15	20	12	12								
B06		1	22	25	10	10								
W24L2-C00, C0Z	460-3	1	9	15	14	14								
C06		1	11	15	14	14								
W30L2-A00*, A0Z*	230/208-1	1	24	35	8	10								
A05*		1	32	35	8	10								
A08		1	47	50	8	10								
A10*		1	58	60	6	10								
A15		1 or 2	84	90	4	8	58	26	60	30	6	10	10	10
W30L2-B00*, B0Z*	230/208-3	1	18	20	12	12								
B09*		1	33	35	8	10								
B15		1	51	60	6	10								
W30L2-C00*, C0Z*	460-3	1	11	15	14	14								
C09*		1	17	20	12	12								
C15		1	26	30	10	10								
W36L2-A00*, A0Z*	230/208-1	1	29	35	8	10								
A05*		1	32	35	8	10								
A10*		1	58	60	6	10								
A15		1 or 2	84	90	4	8	58	26	60	30	6	10	10	10
W36L2-B00*, B0Z*	230/208-3	1	23	30	10	10								
B09*		1	33	35	8	10								
B15		1	51	60	6	10								
W36L2-C00*, C0Z*	460-3	1	11	15	14	14								
C09*		1	16	20	12	12								
C15		1	26	30	10	10								
W42L2-A00, A0Z	230/208-1	1	32	50	8	10								
A05		1	32	50	8	10								
A10		1	58	60	6	10								
A15		1 or 2	84	90	4	8	58	26	60	30	6	10	10	10
W42L2-B00, B0Z	230/208-3	1	24	35	8	10								
B09		1	33	35	8	10								
B15		1	51	60	6	10								
W42L2-C00, C0Z	460-3	1	12	15	14	14								
C09		1	17	20	12	12								
C15		1	26	30	10	10								
W48L2-A00, A0Z	230/208-1	1	39	50	8	10								
A05		1	39	50	8	10								
A10		1	58	60	6	10								
A15		1 or 2	84	90	4	8	58	26	60	30	6	10	10	10
W48L2-B00, B0Z	230/208-3	1	27	40	8	10								
B09		1	33	40	8	10								
B15		1	51	60	6	10								
W48L2-C00, C0Z	460-3	1	13	20	12	12								
C09		1	17	20	12	12								
C15		1	26	30	10	10								
W60L2-A00, A0Z	230/208-1	1	42	60	8	10								
A05		1	42	60	8	10								
A10		1	60	60	6	10								
A15		1 or 2	86	90	3	8	60	26	60	30	6	10	10	10
W60L2-B00, B0Z	230/208-3	1	28	40	8	10								
B09		1	35	40	8	10								
B15		1	53	60	6	10								
W60L2-C00, C0Z	460-3	1	15	20	12	12								
C09		1	18	20	12	12								
C15		1	27	30	10	10								
W70L2-A0Z	230/208-1	1	56	60	6	10								
A05		1	56	60	6	10								
A10		1	59	60	6	10								
A15		1 or 2	85	90	4	8	59	26	60	30	6	10	10	10
W70L2-B0Z	230/208-3	1	38	60	8	10								
B09		1	38	60	8	10								
B15		1	53	60	6	10								
W70L2-C0Z	460-3	1	19	30	10	10								
C09		1	19	30	10	10								
C15		1	27	35	18	10								

① Maximum size of the time delay fuse or circuit breaker for protection of field wiring conductors.
② Based on 75C copper wire. All wiring must conform to the National Electrical Code and all local codes.
③ These "Minimum Circuit Ampacity" values are to be used for sizing the field power conductors. Refer to the National Electrical code (latest version), Article 310 for power conductor sizing.

Caution: When more than one field power circuit is run through one conduit, the conductors must be derated. Pay special attention to note 8 of Table 310 regarding Ampacity Adjustment Factors when more than three (3) current carrying conductors are in a raceway.

* Top outlet supply option is available only factory installed and only on the selected models.

IMPORTANT: While this electrical data is presented as a guide, it is important to electrically connect properly sized fuses and conductor wires in accordance with the National Electrical Code and all local codes.

TABLE 5
Recommended Airflow

Model	Nominal Rated CFM *	Nominal Rated ESP *	Recommended Airflow Range	Factory Speed Connection
W17A, W17L	600	.40	550 - 725	Low
W18A, W18L	550	.45	550 - 725	Low
W24A, W24L	800	.30	700 - 950	Single
W30A, W30L	1000	.30	850 - 1300	High
W36A, W36L	1100	.20	930 - 1350	High
W42A, W42L	1400	.45	1600 - 1150	High
W48A, W48L	1550	.30	1750 - 1285	High
W60A, W60L	1700	.40	1950 - 1375	High
W70A, W70L	1700	.20	1950 - 1375	High

* Rated CFM and ESP on factory speed connection.

TABLE 6
Indoor Blower Performance

Speed	W17/18				W24		W30				W36				W42/48				W60				W70			
	High		Low		Single		High		Low		High		Low		High		Low		High		Low		High		Low	
ESP (Inch H20)	Dry Coil	Wet Coil	Dry Coil	Wet Coil	Dry Coil	Wet Coil	Dry Coil	Wet Coil	Dry Coil	Wet Coil	Dry Coil	Wet Coil	Dry Coil	Wet Coil	Dry Coil	Wet Coil	Dry Coil	Wet Coil	Dry Coil	Wet Coil	Dry Coil	Wet Coil	Dry Coil	Wet Coil	Dry Coil	Wet Coil
0.0	1045	1025	760	745	990	970	1370	1285	910	885	1415	1275	955	925	1850	1800	1605	1555	2080	2015	1505	1460	2050	1845	1490	1400
0.1	1010	970	730	715	945	925	1305	1225	885	860	1350	1215	945	915	1775	1725	1545	1500	2020	1960	1450	1405	1970	1770	1425	1340
0.2	940	905	700	685	890	870	1225	1135	850	815	1265	1125	925	900	1685	1640	1460	1415	1925	1865	1395	1355	1905	1700	1375	1295
0.3	860	830	670	655	820	800	1115	1020	790	755	1190	1060	875	850	1590	1550	1390	1345	1870	1815	1340	1300	1830	1645	1225	1150
0.4	780	750	610	595	735	720	1005	910	695	660	1085	975	780	755	1495	1460	1310	1270	1755	1705	1225	1185	1725	1550	1140	1070
0.5	665	640	485	455	605	590	865	775	590	560	970	865	640	615	1400	1365	1225	1185	1660	1610	1125	1085	1500	1350	1050	985

TABLE 7
Maximum ESP of Operation
Electric Heat Only

Model	W17A/L, W18A/L, W24A/L	W30A/L, W36A/L				W42A/L, W48A/L		W60A/L, W70A/L	
Outlet	FRONT	FRONT		TOP		FRONT		FRONT	
Speed	Single	High	Low	High	Low	High	Low	High	Low
-A0Z	.50	.50	.50	.50	.50	.50	.50	.50	.50
-A04				.50	.45				
-A05	.50	.50	.50			.50	.50	.50	.50
-A08	.50	.50	.50						
-A10		.50	.45	.50	.35	.50	.50	.50	.50
-A15		.40	.35			.50	.50	.50	.50
-A20						.50	.45	.50	.40
-B0Z	.50	.50	.50	.50	.50	.50	.50	.50	.50
-B06	.50	.50	.40						
-B09		.50	.50	.45	.40	.50	.50	.50	.50
-B15		.45	.30			.50	.50	.50	.50
-B18						.50	.50	.50	.50
-C0Z		.50	.50	.50	.50	.50	.50	.50	.50
-C06		.50	.50						
-C09		.50	.40	.45	.40	.50	.50	.50	.50
-C15		.45	.35			.50	.50	.50	.50

Values shown are for units equipped with standard 1" throwaway filter or 1" washable filter.
Derate ESP by .15 for 2" pleated filters.

TABLE 8
Electric Heat

Models	240V-1		208V-1		240V-3		208V-3		460V-3	
KW	**Amps**	**BTUH**	**Amps**	**BTUH**	**Amps**	**BTUH**	**Amps**	**BTUH**	**Amps**	**BTUH**
4	16.7	13650	14.4	10240						
5	20.8	17065	18.1	12800						
6					14.4	20500	12.5	15360	7.2	20500
8	33.3	27300	28.8	20475						
9					21.7	30600	18.7	23030	10.8	30700
10	41.6	34130	36.2	25600						
12									14.4	40950
15	62.5	51250	54.0	38400	36.2	51200	31.2	38400	18.0	51200
18					43.3	61430	37.5	46100		
20	83.2	68260	72.1	51200						

TABLE 9A
Optional Accessories – Right Hand

		W17/18A2-A	W24A2-A	W24A2-B	W24A2-C	W30A2-A	W30A2-B	W30A2-C	W36A2-A	W36A2-B	W36A2-C	W42A2-A	W42A2-B	W42A2-C	W48A2-A	W48A2-B	W48A2-C	W60A2-A	W60A2-B	W60A2-C	W70A2-A	W70A2-B	W70A2-C
Heater Kits	EHWA02-A05	X	X																				
	EHW02A-A08	X	X																				
	EHWA02A-A10	X	X																				
	EHWA24-A04		X																				
	EHWA24-B06			X																			
	EHWH24B-C06				X																		
	EHWA03-A05					X			X														
	EHWA03-A08					X			X														
	EHWA03-A10					X			X														
	EHWA03-A15					X			X														
	EHWA03-B06						X																
	EHW36A-B06									X													
	EHWA03-B09						X			X													
	EHWA37-B15						X			X													
	EHWC03A-C06							X			X												
	EHWC03A-C09							X			X												
	EHWA03A-C12							X			X												
	EHWA03A-C15							X			X												
	EHWA05-A05											X			X								
	EHWA05-A10											X			X			X			X		
	EHWA05-A15											X			X			X			X		
	EHWA05-A20											X			X			X			X		
	EHWA05-B09												X			X							
	EHWA05-B15												X			X			X			X	
	EHW05A-B18																		X				
	EHWA05-B18												X			X							
	EHWA05A-C09													X			X			X			X
	EHWA05A-C15													X			X			X			X
	EHWA60-A05																	X			X		
	EHW60A-B09																		X				
	EHW70A-B09																					X	
	EHW70A-B18																					X	
Circuit Breaker (WMCB) & Pull Disconnect (WMPD)	WMCB-01B			X																			
	WMCB-02A	X																					
	WMCB-02B						X																
	WMCB-03A		X																				
	WMCB-04B									X													
	WMCB-05A					X			X														
	WMCB-05B												X			X							
	WMCB-06B																		X				
	WMCB-08A											X			X								
	WMCB-09A																	X			X		
	WMPD-01C				X			X			X			X			X			X			X
	WMCB-08B																					X	

TABLE 9B
Optional Accessories – Left Hand

		W17/18L2-A	W24L2-A	W24L2-B	W30L2-A	W30L2-B	W30L2-C	W36L2-A	W36L2-B	W36L2-C	W42L2-A	W42L2-B	W42L2-C	W48L2-A	W48L2-B	W48L2-C	W60L2-A	W60L2-B	W60L2-C	W70L2-A	W70L2-B	W70L2-C
Heater Kits	EHWA02A-A05L	X	X																			
	EHW02A-A08L	X	X																			
	EHWA02-A10L	X	X																			
	EHWA24-B06L			X																		
	EHWA03-A05L				X			X														
	EHWA03-A08L				X																	
	EHWA03-A10L				X			X														
	EHWA03-A15L				X			X														
	EHWA03-B09L					X			X													
	EHWA37-B15L					X			X													
	EHWC03-C09L						X			X												
	EHWA03-C15L						X			X												
	EHWA05-A05L										X			X			X					
	EHWA05-A10L										X			X			X			X		
	EHWA05-A15L										X			X			X			X		
	EHWA05-B09L											X			X							
	EHWA05-B15L											X			X			X			X	
	EHWA05A-C09L												X			X			X			X
	EHWA05A-C15L												X			X			X			X
	EHWA60-A05L																			X		
	EHWA60-B09L																	X				
	EHW70A-B09L																				X	
Circuit Breaker (WMCB) & Pull Disconnect (WMPD)	WMCB-01B			X																		
	WMCB-02A	X																				
	WMCB-02B					X																
	WMCB-03A		X																			
	WMCB-04B								X													
	WMCB-05A				X			X														
	WMCB-05B											X			X							
	WMCB-06B																	X				
	WMCB-08A										X			X								
	WMCB-09A																X			X		
	WMPD-01C						X			X			X			X			X			X
	WMCB-09B																				X	

TABLE 10
Vent and Control Options

Part Number	Description	W17, W18, W24	W30, W36	W42, W48, W60, W70
CMC-14	ODT	X	X	X
CMC-15	Start Kit (230V 1-Phase)	X	X	X
CMC-23	DDC	X	X	
CMC-24	DDC			X
CMC-28	LAC	X	X	X
BFAD-2	Barometric Fresh Air Damper - Standard	X		
BOP-2	Blank Off Plate	X		
MFAD-2	Motorized Fresh Air Damper	X		
CRV-2	Commercial Ventilator - Spring Return	X		
ECONWMS-E2 ECONWMT-E2 ECONWMT-T2	Economizer - School Version, Enthalpy Economizer - Bldg. Equipment, Enthalpy Economizer - Bldg. Equipment, DB Temp.	X X X		
ERVF-A2	Energy Recovery Ventilator - 230 Volt	X		
ERVF-C2	Energy Recovery Ventilator - 460 Volt	X		
BFAD-3	Barometric Fresh Air Damper - Standard		X	
BOP-3	Blank Off Plate		X	
MFAD-3	Motorized Fresh Air Damper		X	
CRVS-3	Commercial Ventilator - Spring Return		X	
CRVP-3	Commercial Ventilator - Power Return		X	
ECONWMS-E3 ECONWMT-E3 ECONWMT-T3	Economizer - School Version, Enthalpy Economizer - Bldg. Equipment, Enthalpy Economizer - Bldg. Equipment, DB Temp.		X X X	
ERVF-A3	Energy Recovery Ventilator - 230 Volt		X	
ERVF-C3	Energy Recovery Ventilator - 460 Volt		X	
BFAD-5	Barometric Fresh Air Damper - Standard			X
BOP-5	Blank Off Plate			X
MFAD-5	Motorized Fresh Air Damper			X
CRVS-5	Commercial Ventilator - Spring Return			X
CRVP-5	Commercial Ventilator - Power Return			X
ECONWMS-E5 ECONWMT-E5 ECONWMT-T5	Economizer - School Version, Enthalpy Economizer - Bldg. Equipment, Enthalpy Economizer - Bldg. Equipment, DB Temp.			X X X
ERVF-A5	Energy Recovery Ventilator - 230 Volt			X
ERVF-C5	Energy Recovery Ventilator - 460 Volt			X

INSTALLATION INSTRUCTIONS

LOW VOLTAGE
CONTROL CIRCUIT WIRING

Models:

W**A2 W**A2D W**L2

NOTE: ***For 10 EER models W**AA and W**LA, see low voltage control wiring schematics in unit installation instructions.***

Bard®
SINCE 1914
Climate Control Solutions

Bard Manufacturing Company, Inc.
Bryan, Ohio 43506
www.bardhvac.com

Manual No.: 2100-582E
Supersedes: 2100-582D
Date: 7-26-17

CONTENTS

Installation

Wiring – Low Voltage Wiring..... 3
Operating Voltage Range 3
Low Voltage Connections..... 3

Tables

Table 1 Diagram to Use w/Unit and Vents..... 3
Table 2 Operating Voltage Range..... 3
Table 3 Wall Thermostat..... 4
Table 4 Humidity Controls 4
Table 5 CO_2 Controller..... 4
Table 6 Thermostat Wire Size..... 4

Figures

Figure 1 Basic A/C with Optional Electric Heat No Economizer or Vent Packages 5
Figure 2 Opt. MFAD, CRV or ERV Vent. Pkg. w/Programmable T-Stat..... 6
Figure 3 Opt. MFAD, CRV or ERV Vent. Pkg. w/Non-Programmable T-Stat..... 7
Figure 4 A/C with Economizer 8
Figure 5 A/C w/Dehumidification Sequence & No Vent Pkg. 9
Figure 6 A/C w/Dehumidification Sequence & No Vent Pkg. Using Sep. Controls..... 10
Figure 7 A/C w/Dehumidification Sequence w/Vent Pkg. Using Combination Controller..... 11
Figure 8 A/C w/Dehumidification Sequence w/Vent Pkg. Using Non-Prog. T-Stat & Separate Humidity Controller 12
Figure 9 A/C w/Dehumidification Sequence & Economizer 13
Figure 10 A/C w/Dehumidification Sequence & Economizer w/Combination Temperature & Humidity Control 14
Figure 11 A/C w/CS2000 Wiring Diagram 15
Figure 12 1-Stage A/C w/Opt. Elec. Heat w/ ECONWM* Style Economizer 16
Figure 13 A/C w/Dehumidification Sequence & ECONWM* Style Economizer with 8403-060 Combination Temperature & Humidity Control 17

TABLE 1 – Diagram to Use with Unit and Vents

	Vent	None		CRV, ERV, MFAD		CRVMP	EIFM		ECONWM*	CS2000A*
	Vent Code	X		R,M,V,P		C	E		T,W	
	Thermostat	Programmable		Programmable		ALL	Programmable		ALL	ALL
System Type	Model	No	Yes	No	Yes	All	No	Yes	All	All
Air Conditioner	W**A, W**L	1	1	3	2	N/A	4	4	12	11
Air Conditioner w/Dehumidification Sequence	W**A*D W**L*D	6	5	8	7	N/A	9	10	13	11

WIRING – LOW VOLTAGE WIRING

All 230/208V, 1 phase and 3 phase units are equipped with dual primary voltage transformers. All equipment leaves the factory wired on 240V tap. For 208V operation, reconnect from 240V to 208V tap. The acceptable operating voltage range for the 240V and 208V taps are:

An 18 gauge copper, color-coded thermostat cable is recommended. The connection points are shown in this Manual. See table below.

TABLE 2 – Operating Voltage Range

TAP	RANGE
240V	253 – 216
208V	220 – 187

NOTE: *The voltage should be measured at the field power connection point in the unit and while the unit is operating at full load (maximum amperage operating condition).*

Low Voltage Connections

These units use a 24-volt AC low voltage circuit. The "*RT*" terminal is the 24V transformer output, and the "*R*" terminal is the 24VAC *hot* terminal for the operation of the equipment. "*RT*" and "*R*" are connected with brass jumper bar which can be removed and "*RT*" and "*R*" connected to external NC (normally closed) contact such as a fire/smoke detector that will cause immediate shutdown of the equipment upon activation.

"*C*" terminal is *grounded*.
"*G*" terminal is the *fan input*.
"*Y*" terminal is the *compressor input for cooling* units without economizer
"*Y1*" terminal is the *1st Stage input for cooling* (if equipped with economizer)
"*Y2*" terminal is the *2nd Stage input for cooling* (if equipped with economizer)
"*W1*" terminal is the *1st stage electric heat*.
"*W2*" terminal is the *2nd stage heat* (if equipped).
"*A*" terminal is the *ventilation input*. This terminal energizes any factory installed ventilation option.
"*D*" terminal is the dehumidification input. If installed, this terminal energizes any factory installed dehumidification option.

Low Voltage Connections for DDC Control

1-Stage Units

Fan Only	Energize G
1st Stage Cooling Mode	Energize Y, G
1st Stage Heating	Energize W1
2nd Stage Heating (if employed)	Energize W1, W2
Ventilation	Energize G, A
Dehumidification (if employed)	Energize D

TABLE 3
Wall Thermostat

Part Number	Predominate Features
8403-057 (TH3110D1040)	1 stage Cool, 1 stage Heat Electronic Non-Programmable Auto or Manual changeover
8403-058 (TH5220D1151)	2 stage Cool, 2 stage Heat Electronic Non-Programmable HP or Conventional (Default: HP) Auto or Manual changeover
8403-059 (TH5220D1219/U)	2 stage Cool, 2 stage Heat Electronic Non-Programmable HP or Conventional (Default: AC) Auto or Manual changeover
8403-060 (1120-445)	3 stage Cool; 3 stage Heat Programmable/Non-Programmable Electronic HP or Conventional Auto or Manual changeover Dehumidification Output

TABLE 4
Humidity Controls

Part Number	Predominate Features
8403-038 (H600A1014)	SPDT switching, pilot duty 50VA @ 24V Humidity range 20-80% RH
8403-047 (H200-10-21-10)	Electronic dehumidstat SPST closes-on-rise Humidity range 10-90% with adjustable stops

TABLE 5
CO_2 Controller

Part Number	Predominate Features
8403-067	Normally Open SPST relay closes-on-rise 24V dual wave length sensor. Default setting 950ppm, adjustable to 0-2000ppm Default off setting 1000ppm, adjustable to 0-200 ppm can be calibrated

TABLE 6
Thermostat Wire Size

Transformer VA	FLA	Wire Gauge	Maximum Distance In Feet
55	2.3	20 gauge 18 gauge 16 gauge 14 gauge 12 gauge	45 60 100 160 250

FIGURE 1
Basic A/C with Optional Electric Heat
No Economizer or Ventilation Packages

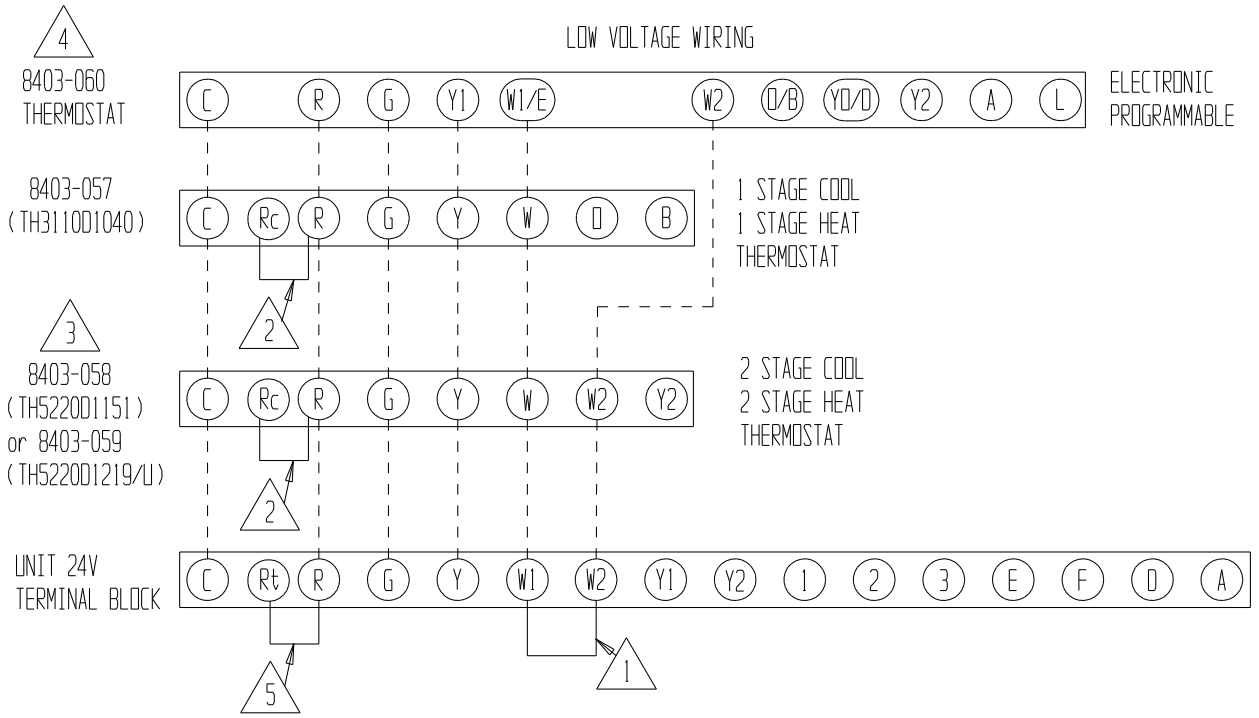

1. REMOVE JUMPER FOR 2 STAGE ELECTRIC HEAT ON UNITS WITH 15 OR MORE KW

2. FACTORY INSTALLED JUMPER

3. FOR 8403-058, CHANGE "SYSTEM TYPE", SET UP FUNCTION 1, FROM 5 (2 HEAT/ 1 COOL HEAT PUMP) TO 6 (2 HEAT/ 2 COOL CONVENTIONAL). FOR 8403-059, NO CHANGE REQUIRED

4. CHANGE MODEL CONFIGURATION FROM HEAT PUMP TO HEAT/COOL.

5. FACTORY INSTALLED JUMPER. FOR IMMEDIATE EMERGENCY SHUTDOWN OF ALL HVAC OPERATION, REMOVE JUMPER AND CONNECT NORMALLY CLOSED (NC) CONTACT TO R AND Rt TERMINALS.

MIS-3138 A

FIGURE 2
Optional MFAD, CRV or ERV Ventilation Packages
with Programmable Thermostat (Recommended)

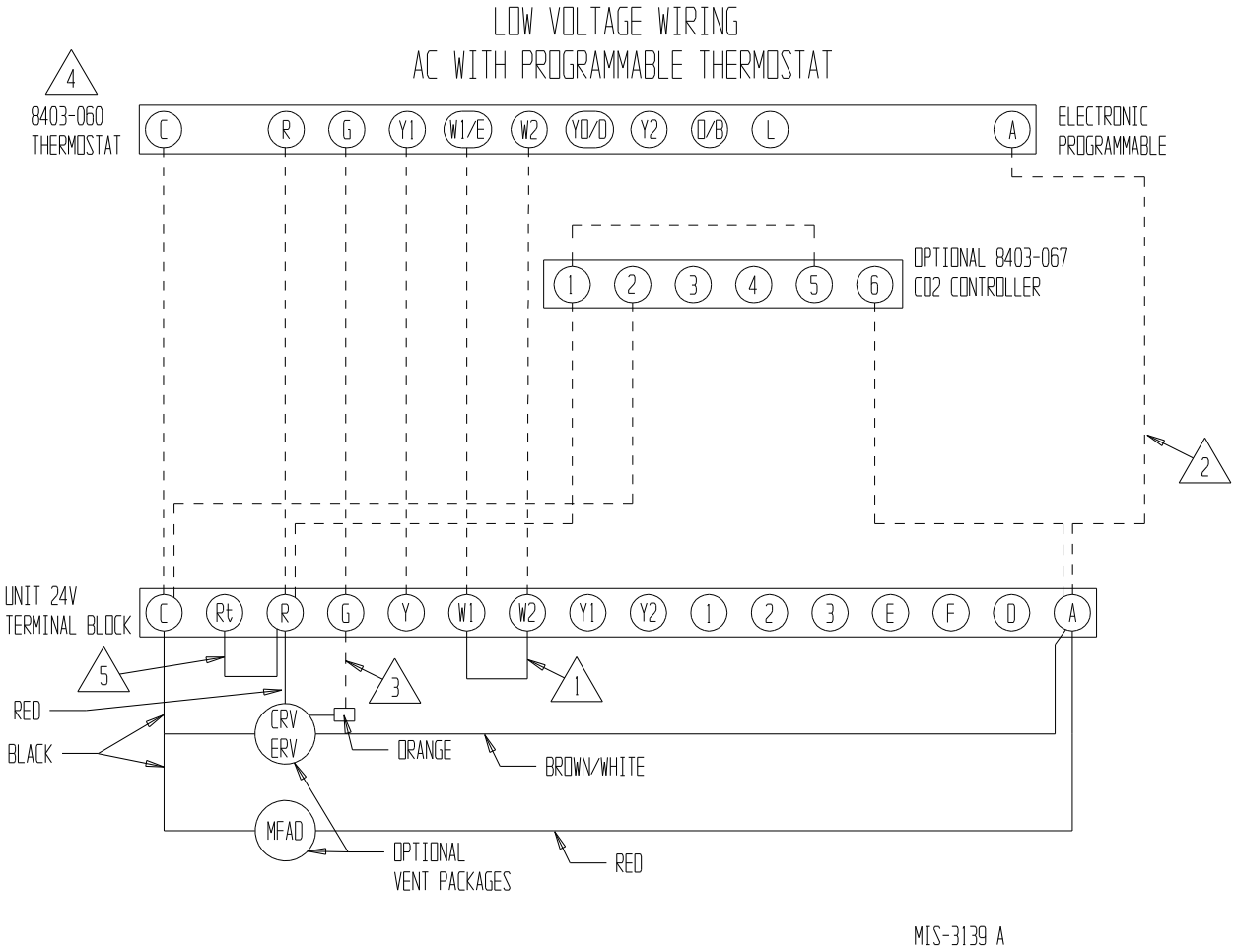

1. REMOVE JUMPER FOR 2 STAGE ELECTRIC HEAT ON UNITS WITH 15 OR MORE KW

2. DO NOT CONNECT "A" FROM 8403-060 IF OPTIONAL CO2 CONTROLLER IS USED

3. CONNECT ORANGE WIRE TO "G" ONLY IF OPTIONAL CO_2 CONTROLLER IS USED

4. CHANGE MODEL CONFIGURATION FROM HEAT PUMP TO HEAT/COOL. MUST BE CONFIGURED TO PROGRAMMABLE AND FAN SET TO PROGRAMMED FAN FOR THE "A" OUTPUT TO FUNCTION DURING SCHEDULED OCCUPIED PERIODS.

5. FACTORY INSTALLED JUMPER. FOR IMMEDIATE EMERGENCY SHUTDOWN OF ALL HVAC OPERATION, REMOVE JUMPER AND CONNECT NORMALLY CLOSED (NC) CONTACT TO R AND Rt TERMINALS.

FIGURE 3
Optional MFAD, CRV or ERV Ventilation Packages
with Non-Programmable Thermostat

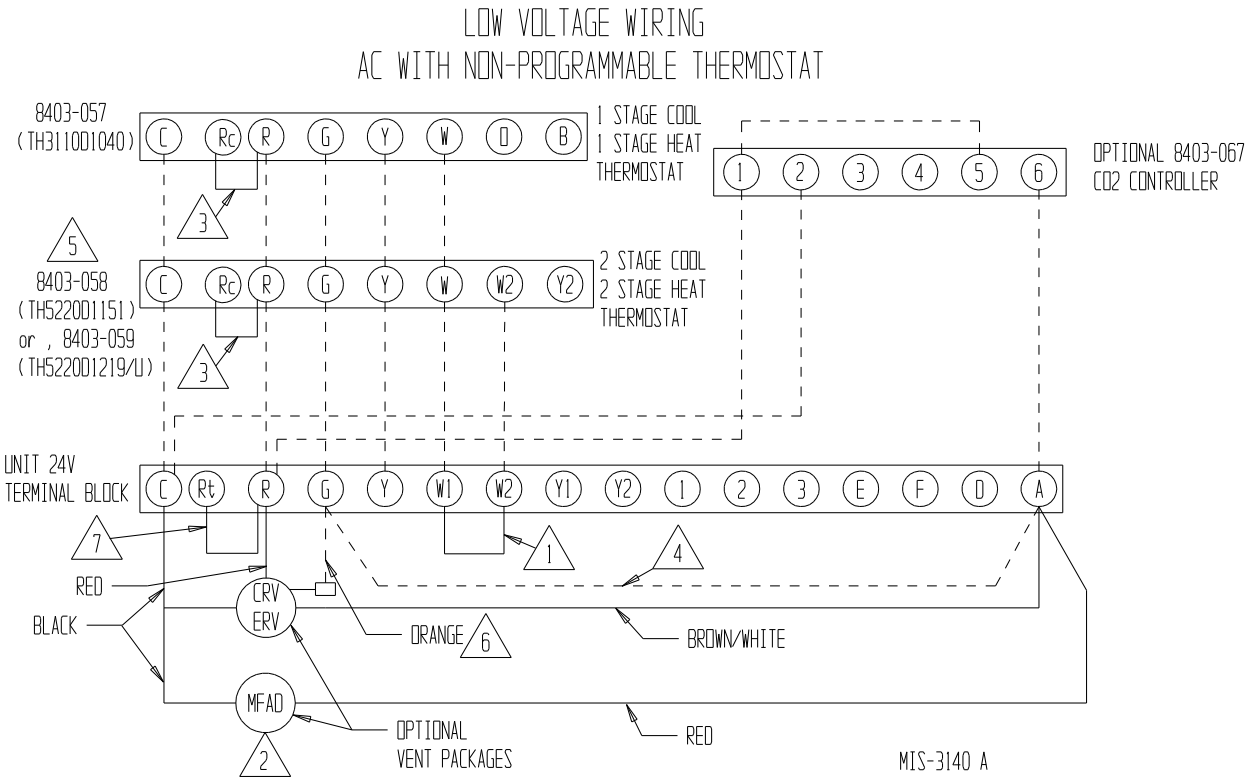

1. REMOVE JUMPER FOR 2 STAGE ELECTRIC HEAT ON UNITS WITH 15 OR MORE KW

2. OPTIONAL VENT OPTION SUGGESTED HOOK UP

3. FACTORY INSTALLED JUMPER

4. ADD JUMPER IF OPTIONAL CO2 CONTROLLER IS NOT USED, VENT WILL RUN WHILE BLOWER IS ENERGIZED. DO NOT INSTALL JUMPER IF OPTIONAL CO2 CONTROLLER INSTALLED, AND SEE NOTE 6.

5. FOR 8403-058 CHANGE "SYSTEM TYPE", SET UP FUNCTION 1, FROM 5 (2 HEAT/ 1 COOL HEAT PUMP) TO 6 (2 HEAT/ 2 COOL CONVENTIONAL). FOR 8403-059, NO CHANGE

6. CONNECT ORANGE WIRE TO "G" ONLY IF OPTIONAL CO2 CONTROLLER IS INSTALLED.

7. FACTORY INSTALLED JUMPER. FOR IMMEDIATE EMERGENCY SHUTDOWN OF ALL HVAC OPERATION, REMOVE JUMPER AND CONNECT NORMALLY CLOSED (NC) CONTACT TO R AND Rt TERMINALS.

FIGURE 4
A/C with EIFM

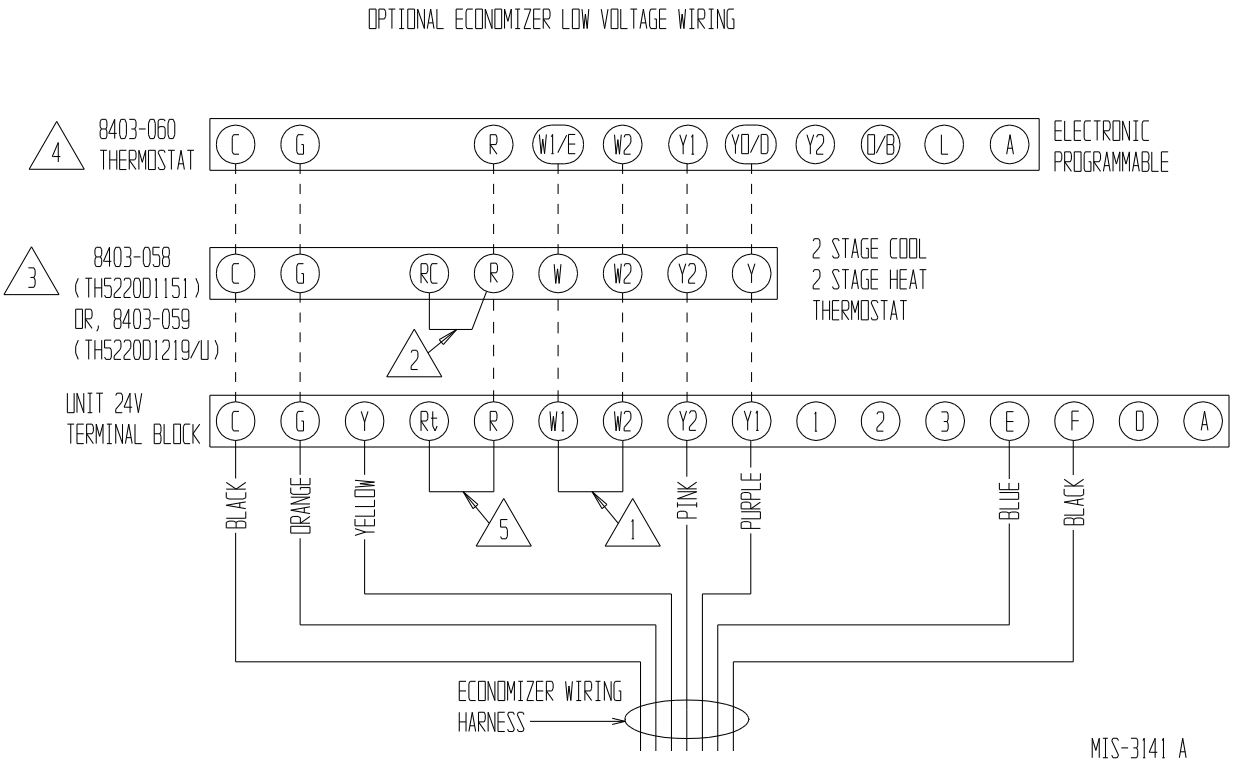

1 REMOVE JUMPER FOR 2 STAGE ELECTRIC HEAT ON UNITS WITH 15 OR MORE KW

2 FACTORY INSTALLED JUMPER

3 FOR 8403-058, CHANGE "SYSTEM TYPE", SET UP FUNCTION 1, FROM 5 (2 HEAT/ 1 COOL HEAT PUMP) TO 6 (2 HEAT/ 2 COOL CONVENTIONAL). FOR 8403-059, NO CHANGE

4 CHANGE MODEL CONFIGURATION FROM HEAT PUMP TO HEAT/COOL, AND MUST BE CONFIGURED FOR ECONOMIZER FOR Y0/O OUTPUT TO BE ACTIVE AS FIRST STAGE COOLING.

5 FACTORY INSTALLED JUMPER. FOR IMMEDIATE EMERGENCY SHUTDOWN OF ALL HVAC OPERATION, REMOVE JUMPER AND CONNECT NORMALLY CLOSED (NC) CONTACT TO R AND Rt TERMINALS.

FIGURE 5
A/C with Dehumidification Sequence
& No Ventilation Package Using
8403-060 Combination Temperature and Humidity Controller

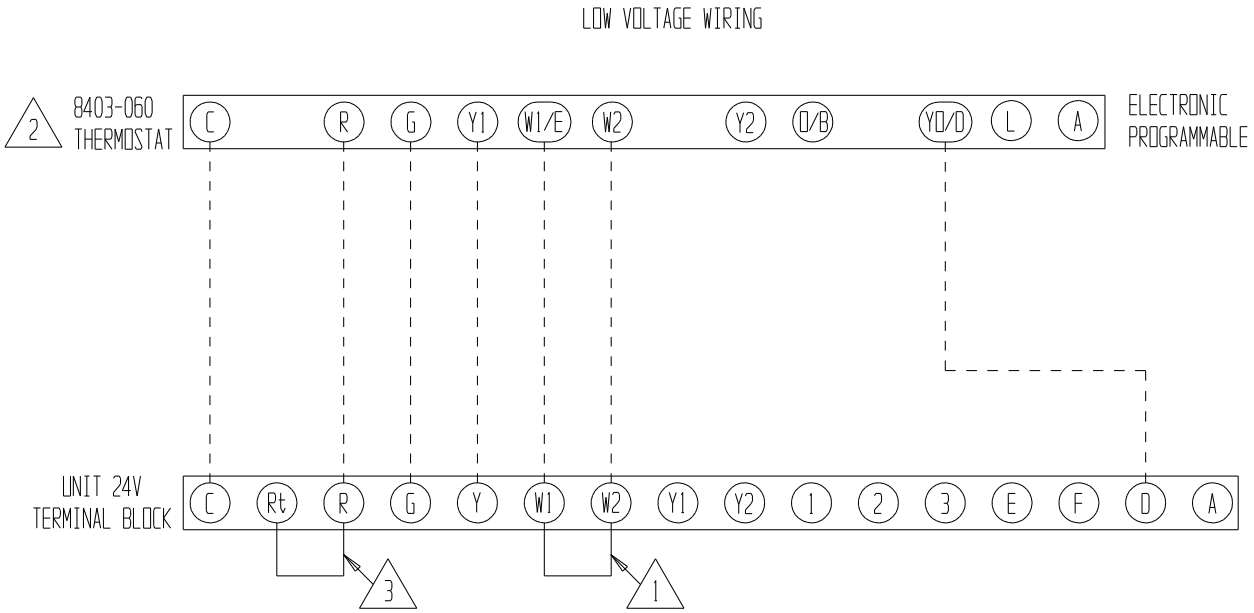

1 REMOVE JUMPER FOR 2 STAGE ELECTRIC HEAT ON UNITS WITH 15 OR MORE KW

MIS-3142

2 CHANGE MODEL CONFIGURATION FROM HEAT PUMP TO HEAT/COOL, AND MUST BE CONFIGURED FOR "NO ECONOMIZER" TO MAKE YO/O OUTPUT ACTIVE FOR HUMIDITY CONTROL

3 FACTORY INSTALLED JUMPER. FOR IMMEDIATE EMERGENCY SHUTDOWN OF ALL HVAC OPERATION, REMOVE JUMPER AND CONNECT NORMALLY CLOSED (NC) CONTACT TO R AND Rt TERMINALS.

FIGURE 6
A/C with Dehumidification Sequence
& No Ventilation Package Using Separate
Temperature and Humidity Controls

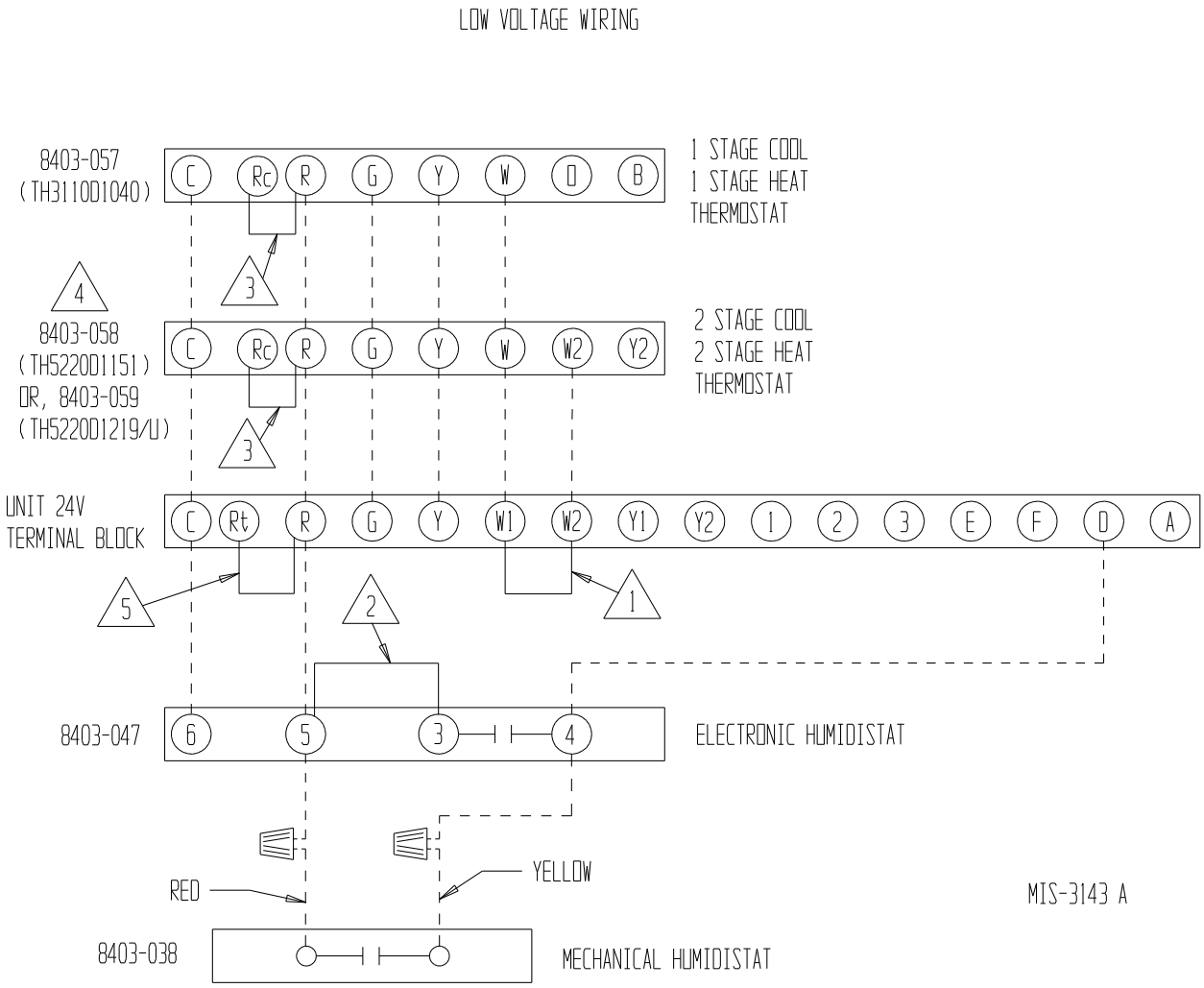

1 REMOVE JUMPER FOR 2 STAGE ELECTRIC HEAT ON UNITS WITH 15 OR MORE KW

2 JUMPER NEEDS TO BE ADDED

3 FACTORY INSTALLED JUMPER

4 FOR 8403-058, CHANGE "SYSTEM TYPE", SET UP FUNCTION 1, FROM 5 (2 HEAT/ 1 COOL HEAT PUMP) TO 6 (2 HEAT/ 2 COOL CONVENTIONAL). FOR 8403-059, NO CHANGE

5 FACTORY INSTALLED JUMPER. FOR IMMEDIATE EMERGENCY SHUTDOWN OF ALL HVAC OPERATION, REMOVE JUMPER AND CONNECT NORMALLY CLOSED (NC) CONTACT TO R AND Rt TERMINALS.

FIGURE 7
A/C with Dehumidification Sequence
with Ventilation Package Using
8403-060 Combination Temperature & Humidity Controller
and 8403-067 CO_2 Controller

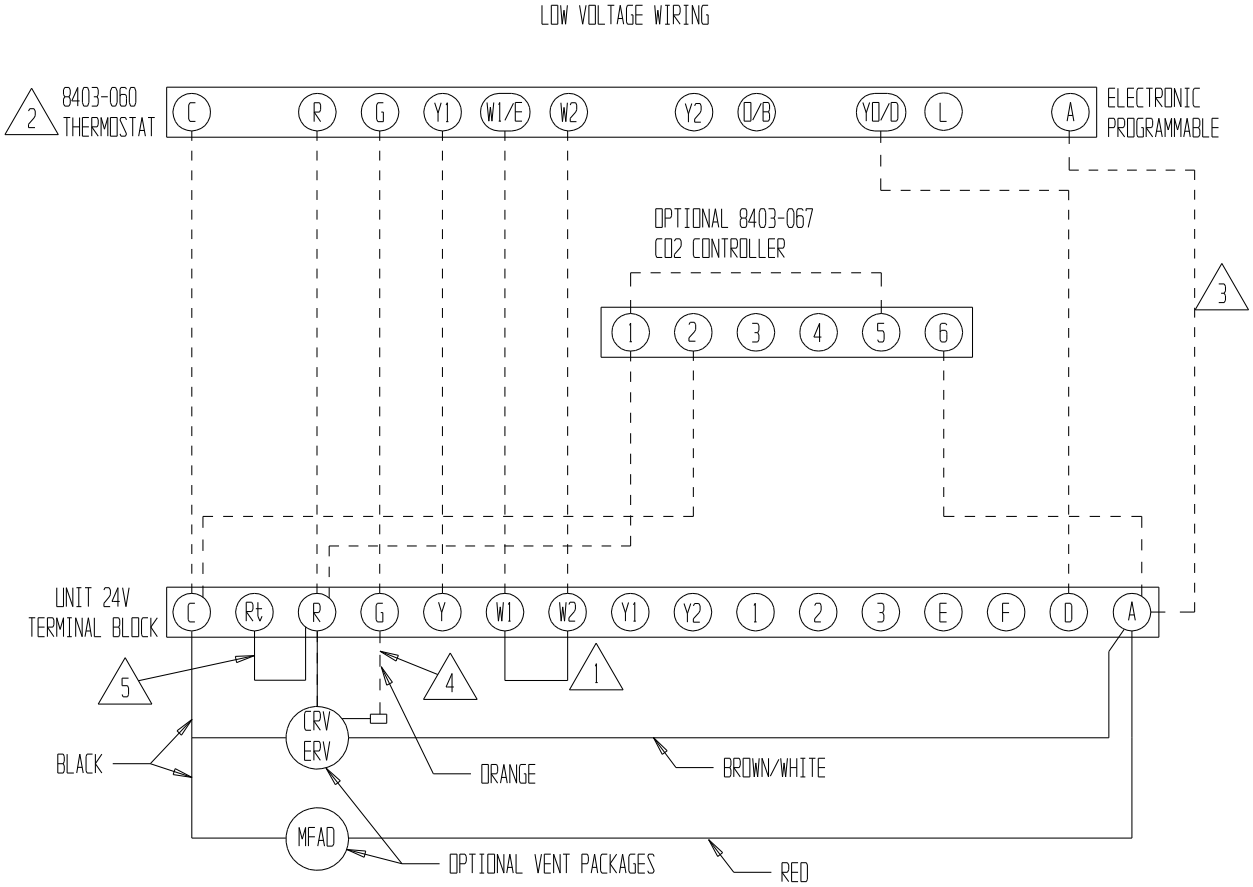

1. REMOVE JUMPER FOR 2 STAGE ELECTRIC HEAT ON UNITS WITH 15 OR MORE KW

MIS-3144

2. CHANGE MODEL CONFIGURATION FROM HEAT PUMP TO HEAT/COOL, AND MUST BE CONFIGURED FOR "NO ECONOMIZER" TO MAKE YO/O OUTPUT ACTIVE FOR HUMIDITY CONTROL

3. DO NOT CONNECT "A" FROM 8403-060 IF OPTIONAL CO2 CONTROLLER IS USED

4. CONNECT ORANGE WIRE TO "G" ONLY IF OPTIONAL CO2 CONTROLLER IS USED.

5. FACTORY INSTALLED JUMPER. FOR IMMEDIATE EMERGENCY SHUTDOWN OF ALL HVAC OPERATION, REMOVE JUMPER AND CONNECT NORMALLY CLOSED (NC) CONTACT TO R AND Rt TERMINALS.

FIGURE 8
A/C with Dehumidification Sequence with Ventilation Package Using Non-Programmable Thermostat and Separate Humidity Controller

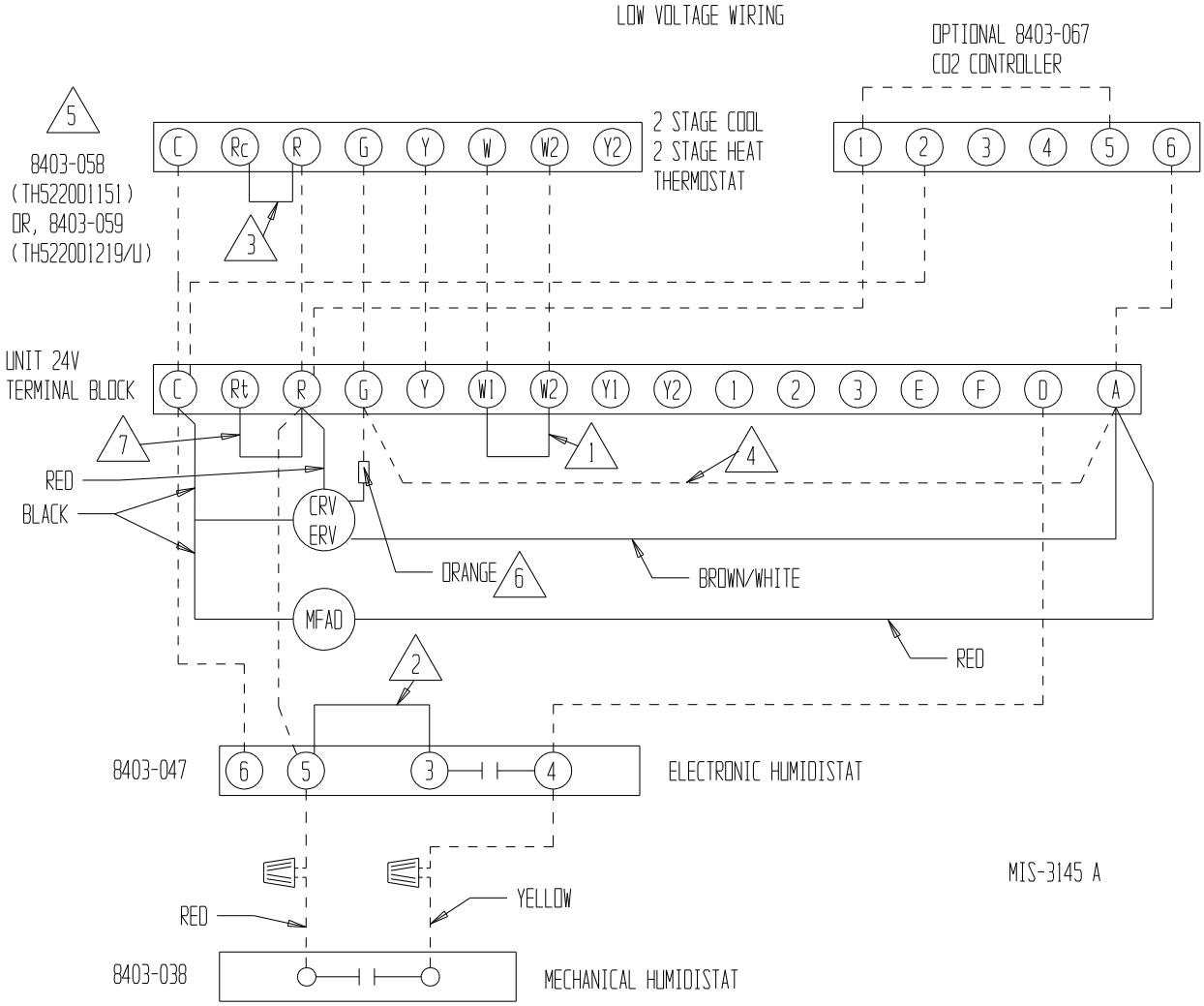

1 REMOVE JUMPER FOR 2 STAGE ELECTRIC HEAT ON UNITS WITH 15 OR MORE KW

2 JUMPER NEEDS TO BE ADDED

3 FACTORY INSTALLED JUMPER

4 ADD JUMPER IF OPTIONAL CO2 CONTROLLER IS NOT USED. VENT WILL RUN WHILE BLOWER IS ENERGIZED, IF CO2 CONTROLLER IS INSTALLED, DO NOT ADD JUMPER AND SEE NOTE 6.

5 FOR 8403-058, CHANGE "SYSTEM TYPE", SET UP FUNCTION 1, FROM 5 (2 HEAT/ 1 COOL HEAT PUMP) TO 6 (2 HEAT/ 2 COOL CONVENTIONAL). FOR 8403-059, NO CHANGE

6 CONNECT ORANGE WIRE TO "G" ONLY IF OPTIONAL CO2 CONTROLLER IS INSTALLED.

7 FACTORY INSTALLED JUMPER. FOR IMMEDIATE EMERGENCY SHUTDOWN OF ALL HVAC OPERATION, REMOVE JUMPER AND CONNECT NORMALLY CLOSED (NC) CONTACT TO R AND Rt TERMINALS.

FIGURE 9
A/C with Dehumidification Sequence
& EIFM with 8403-058 Thermostat
and 8403-038 or 8403-047 Humidistat

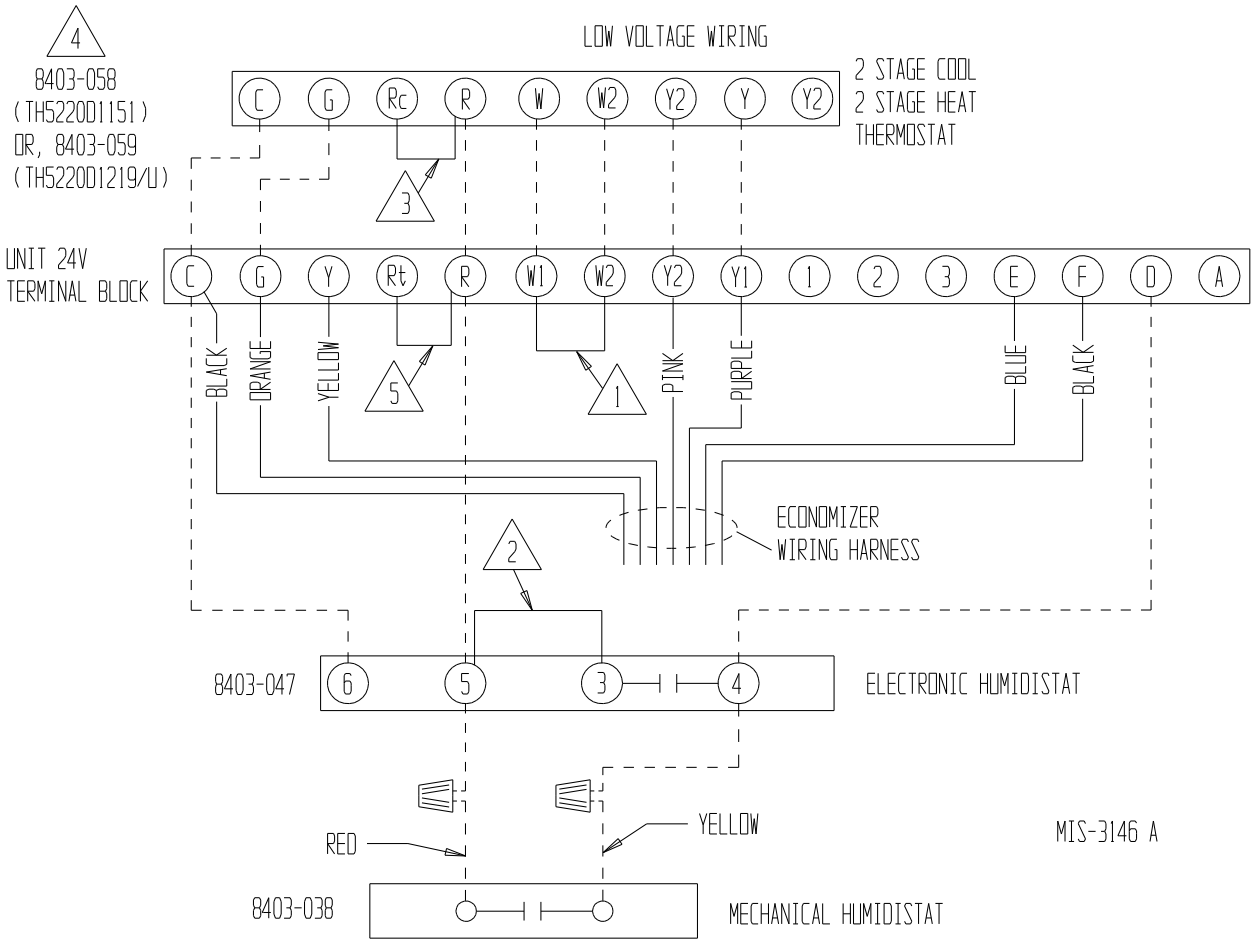

1 REMOVE JUMPER FOR 2 STAGE ELECTRIC HEAT ON UNITS WITH 15 OR MORE KW

2 JUMPER NEEDS TO BE ADDED

3 FACTORY INSTALLED JUMPER

4 FOR 8403-058, CHANGE "SYSTEM TYPE", SET UP FUNCTION 1, FROM 5 (2 HEAT/ 1 COOL HEAT PUMP) TO 6 (2 HEAT/ 2 COOL CONVENTIONAL). FOR 8403-059, NO CHANGE

5 FACTORY INSTALLED JUMPER. FOR IMMEDIATE EMERGENCY SHUTDOWN OF ALL HVAC OPERATION, REMOVE JUMPER AND CONNECT NORMALLY CLOSED (NC) CONTACT TO R AND Rt TERMINALS.

FIGURE 10
A/C with Dehumidification Sequence
& EIFM with 8403-060
Combination Temperature and Humidity Control

LOW VOLTAGE WIRING

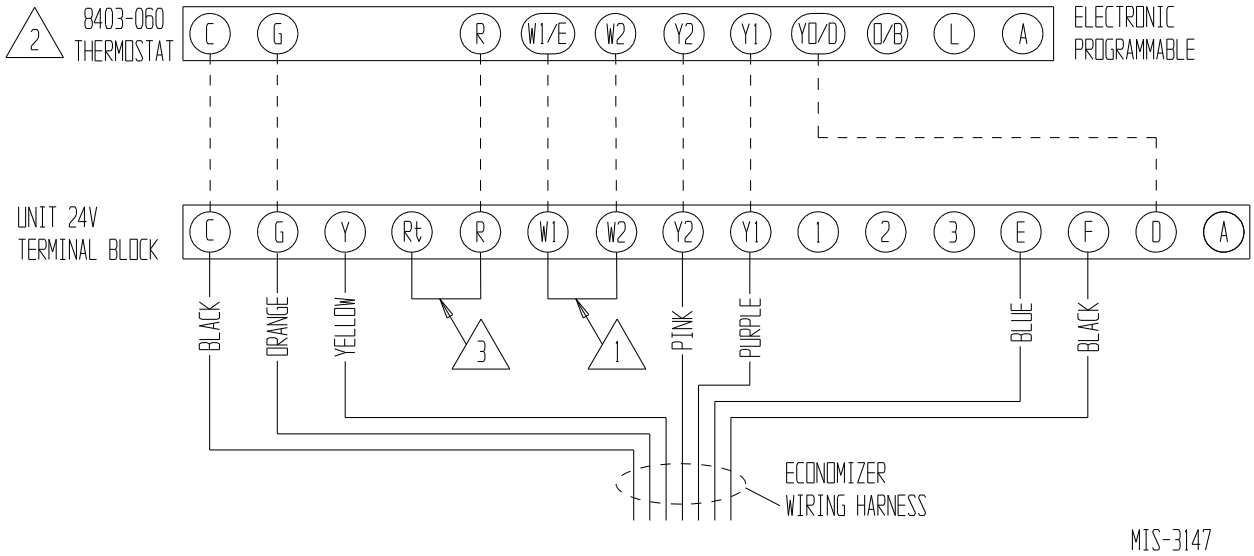

1 REMOVE JUMPER FOR 2 STAGE ELECTRIC HEAT ON UNITS WITH 15 OR MORE KW

2 CHANGE MODEL CONFIGURATION FROM HEAT PUMP TO HEAT/COOL, AND MUST BE CONFIGURED FOR NO ECONOMIZER AND MULTI-STAGE FOR Y1 OUTPUT TO BE ACTIVE AS FIRST STAGE COOLING AND YD/D TO BE ACTIVE FOR HUMIDITY CONTROL

3 FACTORY INSTALLED JUMPER. FOR IMMEDIATE EMERGENCY SHUTDOWN OF ALL HVAC OPERATION, REMOVE JUMPER AND CONNECT NORMALLY CLOSED (NC) CONTACT TO R AND Rt TERMINALS.

FIGURE 11
A/C with CS2000

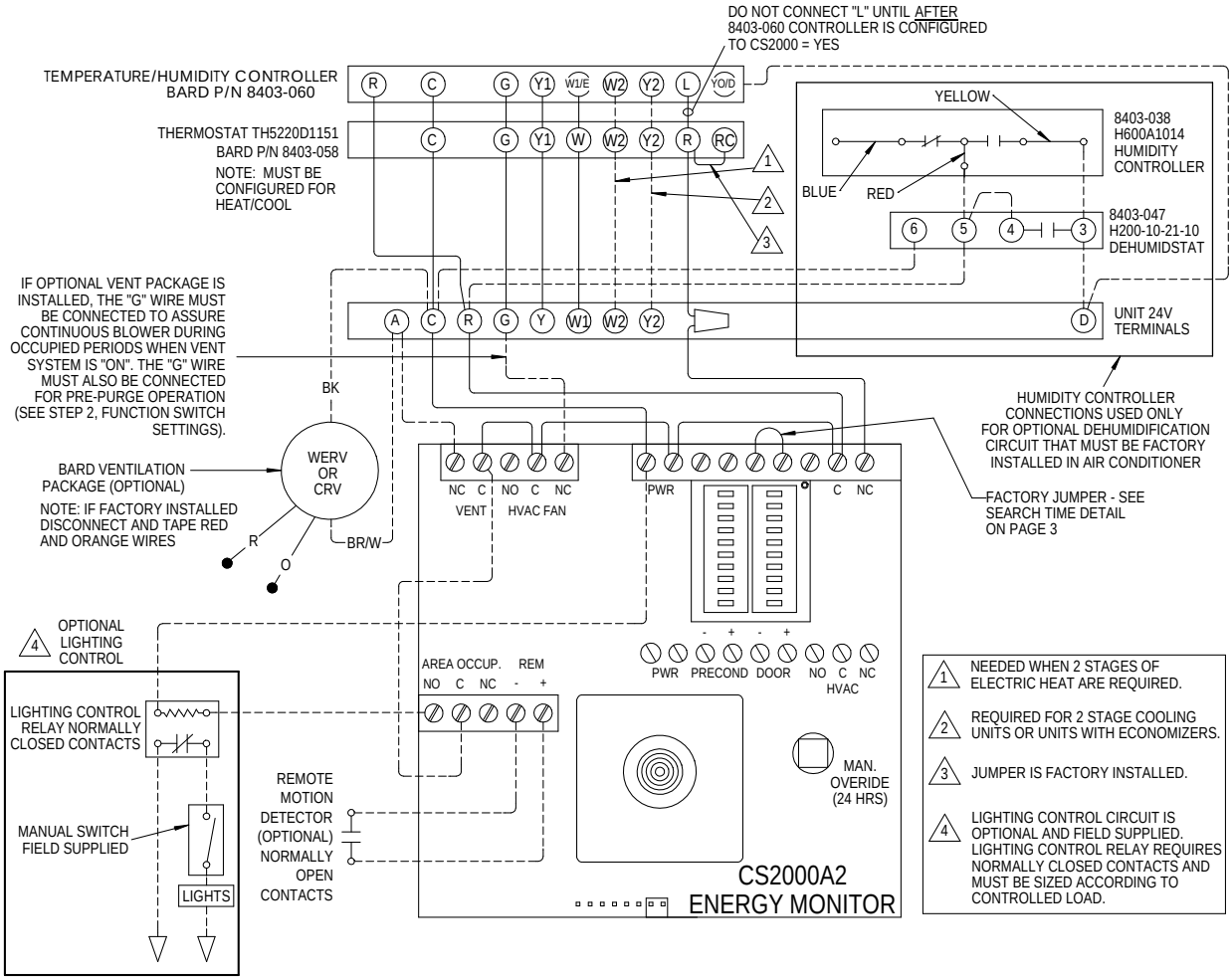

RECOMMENDED SWITCH SETTINGS SHOWN BELOW

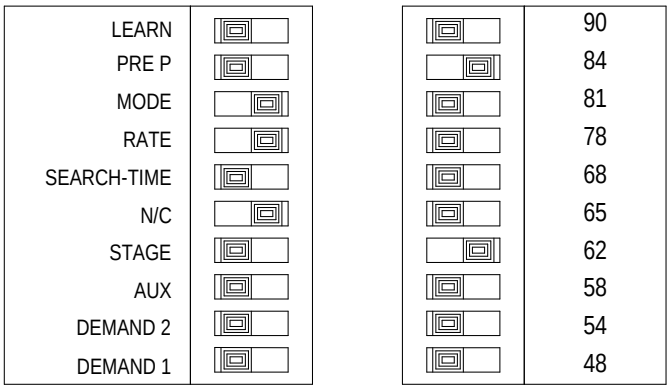

4093-157

FIGURE 12
1-Stage A/C with Optional Electric Heat
with ECONWM∗ Style Economizer

Low Voltage Wiring Diagram

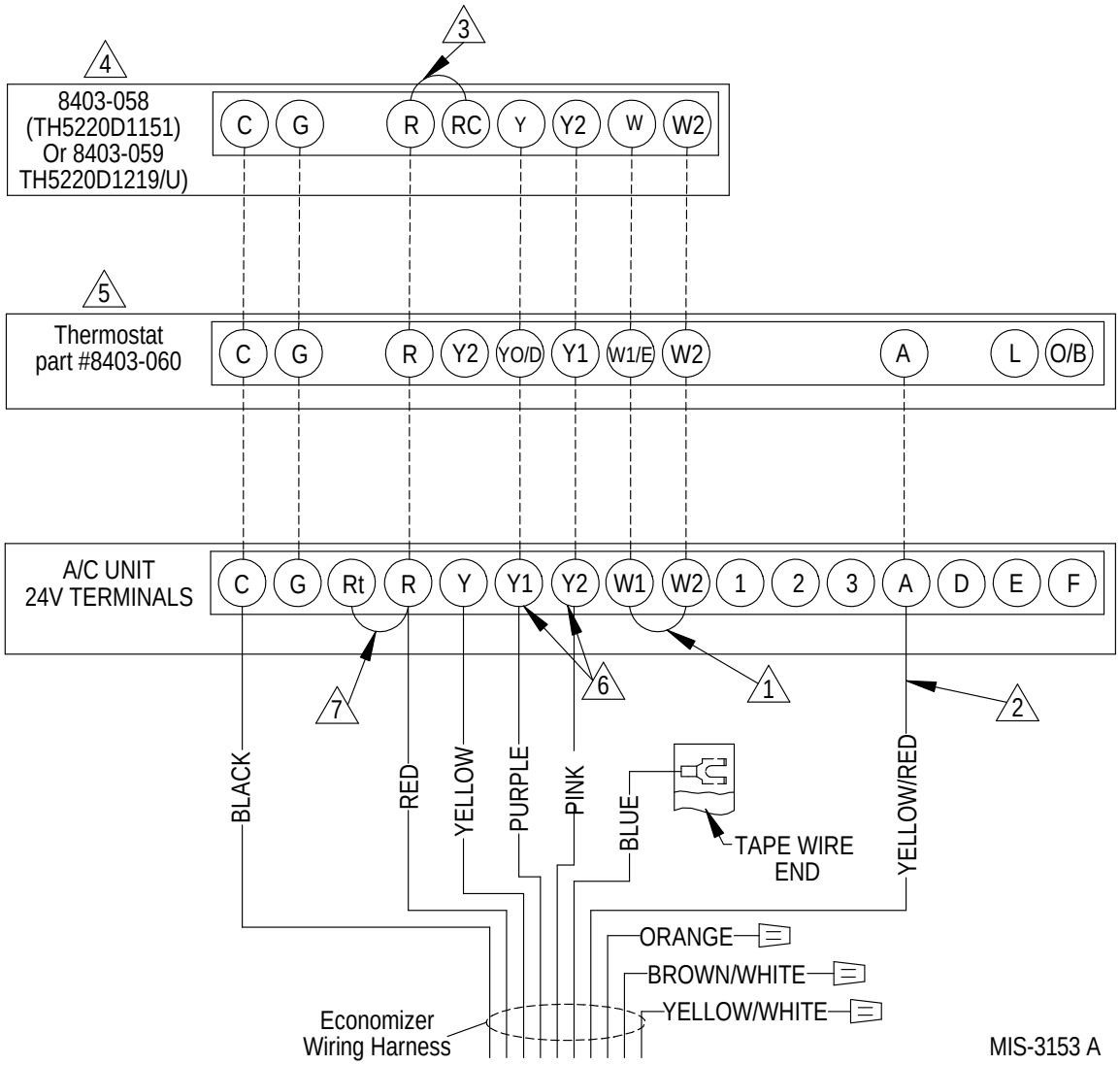

1 *Factory installed jumper. Remove for 2-stage operation on units with 15 or more kw.*

2 *Must be energized to enable minimum position. NOTE: Economizer Control Default Setting is 10V (100%). Depending upon application may require setting to lower value.*

3 *Factory Jumper Installed.*

4 *For 8403-058, Change "system type", set up function 1, from 5 (2 heat/ 1 cool heat pump) to 6 (2 heat/ 2 cool conventional). For 8403-059, No change.*

5 *Change model configuration from heat pump to heat/cool, and must be configured for economizer for YO/D output to be active as first stage cooling.*

6 *Older units may not have Y1 and Y2 connections on 24v terminal block. If not present wire nuts must be used.*

7 *Factory installed jumper. For immediate emergency shutdown of all HVAC operation, remove jumper and connect normally closed (NC) contact to R and Rt terminals.*

FIGURE 13
A/C with Dehumidification Sequence
and ECONWM* Style Economizer with 8403-060
Combination Temperature and Humidity Control

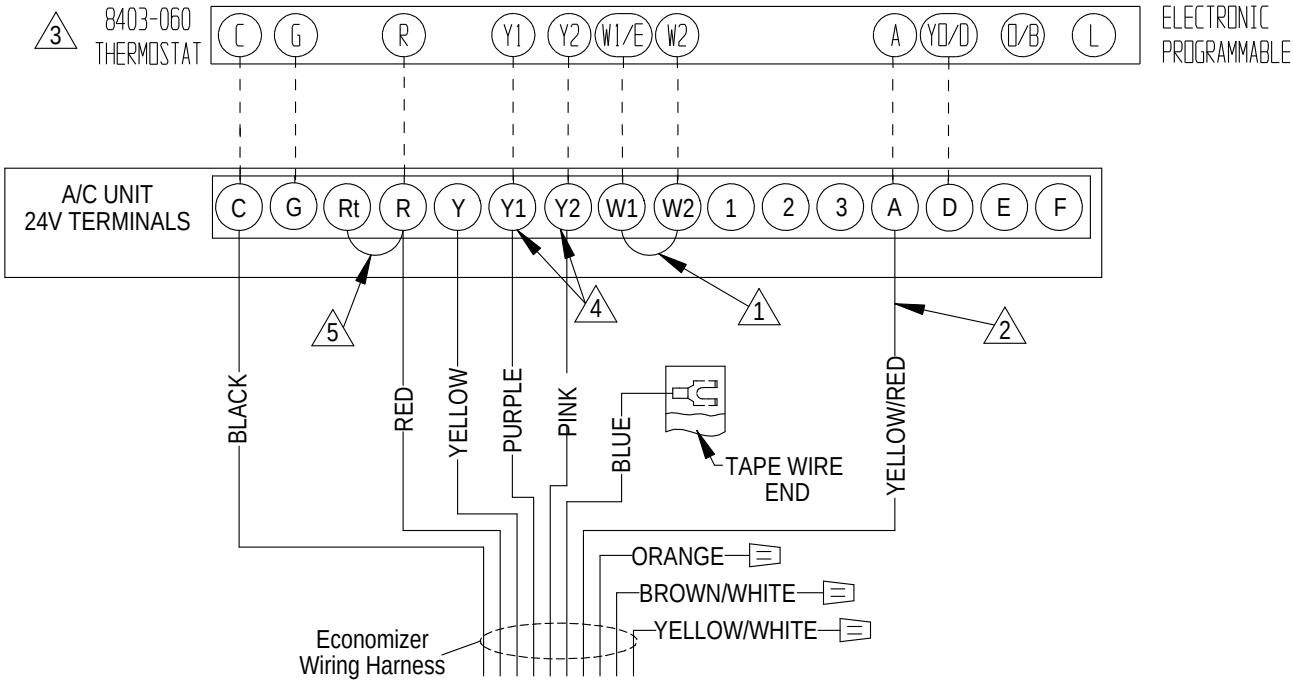

1 *Factory installed jumper. Remove for 2-stage operation on units with 15 or more kw.*

2 *Must be energized to enable minimum position. NOTE: Economizer Control Default Setting is 10V (100%). Depending upon application may require setting to lower value.*

3 Change model configuration from heat pump to Heat/Cool, and must be configured from no economizer and multi-stage for Y1 output to be active as first stage cooling and YO/D to be active for humidity control

4 *Older units may not have Y1 and Y2 connections on 24v terminal block. If not present wire nuts must be used.*

5 *Factory installed jumper. For immediate emergency shutdown of all HVAC operation, remove jumper and connect normally closed (NC) contact to R and Rt terminals.*

SUPPLEMENTAL 50 HZ ELECTRICAL DATA

Bard Manufacturing Company, Inc.
Bryan, Ohio 43506

Model	Rated Volts and Phases	Operating Voltage Range	No. Field Power Circuits	③ Minimum Circuit Ampacity	① Maximum External Fuse or Ckt. Brkr.	② Field Power Wire Size	② Ground Wire Size
W24A2-D0Z	240/220-1	198 - 254	1	16	20	12	12
D05	240/220-1		1	28	30	10	10
D08	240/220-1		1	44	45	8	10
W24A/L2-F0Z	415/380-3	342 - 456	1	9	15	14	14
F05			1	11	15	14	14
W30A2-D0Z	240/220-1	198 - 254	1	19	35	8	10
D05			1	29	35	8	10
D10			1	55	60	6	10
W30A2-F0Z	415/380-3	342 - 456	1	11	15	14	14
F07			1	17	20	12	12
F12			1	26	30	10	10
W36A2-D0Z	240/220-1	198 - 254	1	23	35	8	10
D05			1	29	35	8	10
D10			1	55	60	6	10
W36A2-E0Z	240/220-3	198 - 254	1	21	30	10	10
E06			1	21	30	10	10
E12			1	39	40	8	10
W36A/L2-F0Z	415/380-3	342 - 456	1	11	15	14	14
F07			1	16	20	12	12
F12			1	26	30	10	10
W42A2-E0Z	240/220-3	198 - 254	1	21	35	8	10
E09			1	30	35	8	10
E15			1	49	50	8	10
W42A/L2-F0Z	415/380-3	342 - 456	1	13	20	12	12
F07			1	17	20	12	12
* F14			1	30	30	10	10
W48A2-E0Z	240/220-3	198 - 254	1	24	35	8	10
E09			1	30	35	8	10
E15			1	49	50	8	10
W48A/L2-F0Z	415/380-3	342 - 456	1	14	20	12	12
F07			1	17	20	12	12
* F14			1	31	35	10	10
W60A2-E0Z	240/220-3	198 - 254	1	28	40	8	10
E09			1	34	40	8	10
E15			1	53	60	6	10
W60A/L2-F00	415/380-3	342 - 456	1	16	20	12	12
F07			1	18	20	12	12
* F14			1	32	35	8	10
W70A/L2-F00	400/380-3	342 - 440	1	21	30	10	10
F07			1	21	30	10	10
F14			1	32	35	8	10

① Maximum size of the time delay fuse or "D" type circuit breaker for protection of field wiring conductors.
② Based on 75°C copper wire. All wiring must conform to all local and national electrical codes.
③ These "Minimum Circuit Ampacity" values are to be used for sizing the field power conductors. Refer to the National Electric Code (latest version), Article 310 for power conductor sizing.

***** F14 only offered on W**A Units.

CAUTION: *When more than one field power circuit is run through one conduit, the conductors must be derated. Pay special attention to Note 8 of Table 310 regarding Ampacity Adjustment Factors when more than three (3) conductors are in a raceway.*

IMPORTANT: While this electrical data is presented as a guide, it is important to electrically connect properly sized fuses and conductor wires in accordance with all existing local codes.

Continued on next page.

INDOOR BLOWER PERFORMANCE 50 HZ — CFM DRY / WET

	W24		W30				W36				W42/48				W60				W70			
Speed	**Single**		**High**		**Low**		**High**		**Low**		**High**		**Low**		**High**		**Low**		**High**		**Low**	
ESP (Inch H_2O)	**Dry Coil**	**Wet Coil**	**Dry Coil**	**Wet Coil**	**Dry Coil**	**Wet Coil**	**Dry Coil**	**Wet Coil**	**Dry Coil**	**Wet Coil**	**Dry Coil**	**Wet Coil**	**Dry Coil**	**Wet Coil**	**Dry Coil**	**Wet Coil**	**Dry Coil**	**Wet Coil**	**Dry Coil**	**Wet Coil**	**Dry Coil**	**Wet Coil**
0.0	820	805	1135	1065	755	735	1175	1060	795	770	1535	1495	1330	1290	1725	1670	1250	1210	1700	1530	1235	1160
0.1	785	770	1085	1015	735	715	1120	1010	785	760	1475	1430	1280	1245	1675	1625	1205	1165	1635	1470	1185	1110
0.2	740	720	1015	940	705	675	1050	935	770	745	1400	1360	1210	1175	1600	1550	1160	1125	1580	1410	1140	1075
0.3	680	665	925	845	655	625	990	880	725	705	1320	1285	1155	1115	1550	1505	1110	1080	1520	1365	1015	955
0.4	610	600	835	755	575	550	900	810	645	625	1240	1210	1085	1055	1455	1415	1015	985	1430	1285	945	890
0.5	500	490	720	645	490	465	805	720	530	510	1160	1135	1015	985	1380	1335	935	900	1245	1120	870	820

OUTDOOR FAN MOTOR – 50 HZ

NOTE: Models W42A2-E, -F, W48A2-E, -F, and W60A2-E, -F have a condenser fan motor with a red and black speed tap. It is shipped from the factory with the red lead connected. At no time is the black lead to be connected for 50HZ application.

WIRING – MAIN POWER

The disconnect means must have contact separation of 3 mm or greater in all poles.

USER'S GUIDE

For all Packaged Systems (Air Conditioners and Heat Pumps)

WA & WL - Series Air Conditioners
WH & SH - Series Air Source Heat Pumps

IH - Series Air Source Heat Pumps

QA - Series Air Conditioners
QH - Series Air Source Heat Pumps
QW - Series Water Source Heat Pumps

PA - Series Air Conditioners
PH - Series Air Source Heat Pumps

MANUAL 2100-034 REV. F
SUPERSEDES REV. E
FILE VOL. I, TAB 6

DATE: 02-21-12

TABLE OF CONTENTS

General Information

Air Filters	Page 3
Outdoor Coil	Page 3-4
Routine Equipment Outdoor Maintenance	Page 4

Basic Operating Principles

Air Conditioners	Page 4-5
Heat Pump (Air-to-Air)	Page 5-6
Heat Pump (Water-to-Air)	Page 6
Ventilation	Page 7
Dehumidification Circuits	Page 7

Automatic Control Systems

Thermostats	Page 7
Humidistats (Humidity Controllers)	Page 7-8

Insufficient Cooling or Heating Page 8

Failure to Operate Page 8

Lubrication Requirements Page 8

Periodic Maintenance Page 8-9

Helpful Hints & Operating Practices Page 9

GENERAL INFORMATION

This manual is generic in nature and covers a wide range of heating and cooling products manufactured by Bard Manufacturing Company. It is intended to be a general guide for care and operation of typical systems and covers the most important features you should be aware of and are responsible for as the user of the equipment.

Because our product offerings are so varied and can be equipped with many features and options, it is not possible to cover all aspects of what your specific system may be configured for. Some systems may be quite simple in features to provide basic cooling and possibly heating, while others may also incorporate various ventilation technologies, dehumidification circuits, and many different internal controls as well as room temperature controls. Therefore, you should request a detailed operation sequence and explanation of any special features from your installer and/or Service Company, and also have them instruct you as to any routine maintenance procedures you are responsible for.

This manual will address the basic items that should apply to all systems, and will then be separated into specific types of products to cover things unique to those product types.

AIR FILTERS

Keeping clean air filter(s) is the single most important responsibility of the user of the equipment. Each type of system must be equipped with an air filter(s) in the indoor circulating air system to clean the air, to keep the system itself clean for peak efficiency and capacity, and to prolong the useful life of the equipment. DO NOT operate the system without the proper air filters.

Filters should be inspected at least monthly, and replaced or cleaned (depending on type) as needed. The useful life of an air filter can vary widely depending upon application and use of the equipment, and it is critical to monitor filter condition and establish an acceptable maintenance schedule. Failure to do so will increase operating and repair costs, decrease capacity and efficiency, and shorten the service life of the equipment. A common symptom of a dirty filter in the cooling mode is a freeze-up of the indoor coil.

The air filters used may be a disposable (throwaway) type or may be a cleanable type that can be thoroughly cleaned, rinsed and reused many times. It is important to make sure that the correct filter size and type for your system is always used. If there is any question as to acceptable filter size or type, review the Installation Instructions for the specific equipment involved, if available. Otherwise, consult with your installing dealer or Service Company.

Most equipment can have the filters inspected and serviced by the user with no problems. In some instances, because of equipment design or specific installation conditions, it may be necessary to have this procedure done by a qualified service company. Have your installer or service company show you where the filter(s) are and demonstrate the service procedure or make arrangements for them to provide this service on an as needed basis.

OUTDOOR COIL

The outdoor coil must be kept clean and free of any airborne debris, which can accumulate over time. Large volumes of air are circulated over the coil, and airborne debris such as lint, dust, materials shed from trees, paper or other types of airborne material that can become airborne can collect on the entering coil surface.

The outdoor coil must dissipate heat during the cooling mode, and for a heat pump must also absorb heat during the heating mode. If the coil is dirty and matted with debris, the airflow across the coil will be reduced causing poor performance, increased operating run time and associated utility bills, and in extreme conditions can shorten the useful life of the equipment.

Depending on the specific equipment involved, the surface that can accumulate debris can be on the opposite side that is exposed to view when standing in front of the machine. Closely review the machine when operating to see which direction or path that the airflow moves through the machine, and if the air inlet side of the coil is hidden, try to observe the back (hidden) side by looking into the side grilles, using flashlight if necessary.

While the user of the equipment needs to be aware of the potential of clogging of the outdoor coil surface, actual cleaning of the outdoor coil should not be attempted under most circumstances. If the user should attempt this procedure on their own, never do so without first having the installing dealer or Service Company instruct you in the proper procedure and technique.

WARNING: Do not open or enter the equipment without first turning off the electrical service disconnect. Failure to do so can result in personal injury due to moving parts and/or electric shock hazard resulting in death.

Other conditions that can cause reduction of airflow across the outdoor coil are flowers, shrubbery or other growth too near the outdoor coil air inlet and outlet openings. These living things, especially as they mature and grow, will be just as effective in blocking the airflow and create the same problems as will stacking things against the equipment. These conditions can be easily managed and controlled by the user, as they do not require actually entering into the equipment enclosure, which should only be done by qualified service technicians.

See section on Air-to-Air Heat Pumps for additional information concerning blockage due to heavy snow conditions, if applicable.

ROUTINE EQUIPMENT OUTDOOR MAINTENANCE

1. Avoid having any lawn sprinkler spray directly on the equipment, especially if from a brackish water source.
2. In coastal areas locate equipment the furthest distance away from the coastline as feasible.
3. Frequent cleaning and waxing of the cabinet using a good automobile polish will help extend its original appearance.

BASIC OPERATING PRINCIPLES

AIR CONDITIONERS

COOLING MODE

The cooling mode operates similar to a refrigerator, removing heat from inside the conditioned space and rejects it outside of the space being controlled. There are three main parts of the system:

1. The evaporator (indoor) coil where cold refrigerant absorbs heat from the air, which circulates from the conditioned space, through the machine, and is returned to the space at a lower temperature and with some of the humidity (moisture) removed. The moisture exits through a condensate drain system. A motor/blower assembly moves the indoor air through the system.
2. The compressor, which is a sealed pump that moves the refrigerant through the system.
3. The condenser (outdoor) coil where the heat that was absorbed from the indoor space is discharged to the outdoor environment. A motor/fan system moves the outdoor air across the condenser coil.

A properly sized air conditioner cannot cool a structure off rapidly, and instead will pull down the temperature slowly. It also will remove a certain amount of moisture (humidity) from the circulating air

stream in the process. It may take several hours to pull down a hot, moist building or structure on initial startup, or anytime the system has been turned off for a long period of time. It is generally best to set the thermostat at a comfortable temperature and let it control the system as needed, rather than turning it on and off.

Moisture (humidity) removal with a conventional air conditioner (cooling) unit, or heat pump when operating in the cooling mode, is not directly controlled and is a by-product of the unit operating to control temperature in response to the temperature (thermostat) control device. Oversized equipment can easily control temperature but will have short run-times, thus reducing its ability to remove moisture from the circulating air stream. There are also many additional influences that can affect humidity levels within the conditioned space such as laundry appliances, cooking, showers, exhaust fans, and any other items that can generate moisture or affect its removal from the space. Therefore, while operation of the air conditioning or heat pump system in the cooling mode will remove some amount of moisture as it reduces the air temperature, precise humidity regulation in the conditioned space cannot be assured and additional equipment such as a dedicated dehumidifier may be required.

HEAT PUMP (Air-to-Air)

A heat pump is a refrigerant-based system that has additional components and controls that both heats and cools using a compressor for both modes of operation. Most heat pumps will also be equipped with some amount of electric heat to supplement the heating capacity of the compressor system on an as needed basis. This operation is entirely automatic and is controlled by the indoor thermostat, and possibly also an outdoor thermostat.

COOLING MODE

The cooling mode of a heat pump is exactly the same as that described for an Air Conditioner in the above section.

HEAT PUMP (HEATING MODE)

The system operates in reverse cycle, meaning that it absorbs and moves heat from the outdoors and transfers it indoors to be rejected into the circulating air stream. Even though it seems cold to humans, there is usable heat that can be extracted efficiently from the outdoor air down to 0 degrees F, although the colder the air is there is less heat to extract and the operating efficiency is diminished.

DEFROST CYCLE

When operating in the heating mode, the outdoor coil will be colder than the outdoor air that is forced over it by the fan system. When the outdoor air temperature is above approximately 40°F, moisture can accumulate on the coil and it will drain down and out the base of the unit. As the air temperature gets below approximately 40°F, the coil temperature will start to drop below 32°F, and frost or ice will begin to form on the coil.

An automatic defrost system keeps track of system run time when the outdoor coil temperature is in the freezing zone, and will initiate a defrost cycle at the appropriate time. The unit continues to operate during the defrost cycle, but the outdoor fan motor will stop and the reversing valve will shift positions to flow hot refrigerant gas through the outdoor coil to melt the accumulated frost. Water will start to drain freely from the unit, and there may be steam emit from the unit.

The length of the defrost cycle will vary depending upon actual outdoor temperature, humidity levels and amount of accumulated frost. It could range from 1-2 minutes up to but not exceeding 10 minutes. When the defrost cycle terminates, the reversing valve will shift back to heating mode and the outdoor fan will restart. There is typically a large puff of steam emitted as the fan restarts.

When the heat pump shifts from cool to heating mode, from heating to cooling mode, and especially during defrost cycles, there will be a pressure transfer sound heard as the reversing valve redirects the flow of refrigerant. This is commonly described as a hissing noise and is a normal sound for this type equipment.

For air source heat pumps, it is important to keep heavy snow from accumulating around the machine to the point of blocking the inlet and outlet openings to the outdoor coil section. For wall mounted or other equipment that is elevated, this should not be a factor; but for equipment installed on or near the ground, this can be an issue in areas prone to heavy and/or blowing snow. The air source heat pump cannot operate effectively and efficiently when snowbound just as a car cannot function well in heavy snow conditions.

HEAT PUMP (Water-to-Air)

These types of heat pumps are also commonly referred to as water source or geothermal systems. Just like the air source heat pump, they are refrigerant-based systems that both heats and cools using a compressor for both modes of operation. The primary difference is that the system uses water or antifreeze protected water solution instead of an air-cooled outdoor heat transfer coil, and there is no outdoor motor/fan system but instead a water pump to provide adequate water flow to the system.

COOLING MODE

The cooling mode of a water-to-air heat pump is exactly the same as that described for an air conditioner in the above section for Air Conditioners, except that the outdoor coil uses water instead of air for the heat transfer medium.

HEAT PUMP (HEATING MODE)

The system operates in reverse cycle, meaning that it acquires and moves heat from the water supply flowing through the water to refrigerant coil, and transfers it indoors to be rejected into the circulating air stream.

Most water-to-air heat pumps (but not all) will also be equipped with some amount of electric heat to supplement the heating capacity of the compressor system on an as needed basis. This operation is entirely automatic and is controlled by the indoor thermostat.

Because of the design of water-to-air heat pumps and the water temperatures involved, no defrost system is required as in air-to-air heat pumps.

WATER SUPPLY SYSTEMS

Depending upon type and application of the water-to-air heat pump, the water side of the system could be one of the following:

1. Individual closed loop buried in a trench or vertical bore hole(s).
2. Individual loop submerged in a pond.
3. Water supplied from a well and discharged into pond, stream, ditch or another well.
4. Water supplied from a boiler/tower system, typically only in larger multi-unit installations.

VENTILATION

Many Bard systems have the capability of various ventilation packages available (either factory or field installed) directly into the basic system. These systems can be described as follows:

1. Barometric fresh air damper
2. Motorized fresh air damper
3. Commercial room ventilator
4. Economizer
5. Energy recovery ventilator

All of these ventilation systems, if installed, are different and are used for different reasons. They may also have different control strategies. Consult your installer and/or Service Company to determine if your installation has any of these devices, and for any instructions or maintenance requirements you should be aware of as the user.

DEHUMIDIFICATION CIRCUITS

Many Bard systems, typically those used in schools or other commercial applications, have a dedicated dehumidification capability by having a special additional refrigeration circuit (factory installed option only) in addition to the basic system. These special systems, sometimes also referred to as hot gas reheat, are designed to control humidity on demand from a humidity controller much the same as the basic cooling and/or heating system is controlled by a wall thermostat.

Consult your installer and/or Service Company to determine if your installation has any of these devices, and for any instructions or maintenance requirements you should be aware of as the user.

AUTOMATIC CONTROL SYSTEMS

THERMOSTATS

There are many types of thermostats available to properly control your system, and these can vary in features and some functions depending upon the type of system (air conditioner, heat pump, etc.) installed and any special options (ventilation, supplemental heat, etc.) that may be installed.

Approved compatible thermostats are available from Bard Manufacturing Company for all applications, and since these can vary in numerous features and functions, it is not possible to adequately discuss them all in this User's Guide. Many installers also install thermostats other than those offered by Bard, and must determine proper compatibility prior to installation.

In addition, many schools and similar institutions may utilize central energy management systems (EMS) or direct digital control (DDC) systems.

In all circumstances have your installer, Service Company or building administrator or maintenance department personnel instruct you as to proper operation of your specific thermostat or temperature control system.

HUMIDISTATS (HUMIDITY CONTROLLERS)

All systems with dedicated dehumidification (hot gas reheat) circuits also require a humidity controller (also called humidistat or de-humidistat) in addition to a thermostat for proper control.

The devices may or may not be adjustable, and if adjustable should only be adjusted by the person(s) responsible for overall building control conditions. Normal settings would be somewhere between

50 and 60% Relative Humidity (RH) and typically affords acceptable human comfort conditions for most individuals, and under no circumstances should be set lower than 40% as overcooling of the conditioned space and/or freeze-ups of the indoor coil may occur.

INSUFFICIENT COOLING OR HEATING

In extremely hot or cold weather your system will continue to deliver its normal supply of conditioned air. If the unit operates but fails to provide sufficient comfort, check the following before calling your Service Company:

1. Be sure the thermostat setting is correct.
2. Check the air filters, and replace or clean if dirty.
3. Make sure that air can circulate freely throughout the conditioned space, and that all supply registers and return air grilles are not blocked.
4. Make sure that the outdoor coil is not blocked with any foreign matter, or otherwise restricted with any growth or other items.

FAILURE TO OPERATE

Check the following before calling your Service Company:

1. Be sure the thermostat setting is correct.
2. Check the air filters, and replace or clean if dirty.
3. Make sure that the power supply, and gas or water supplies if applicable, are “On”.
4. Make sure that air can circulate freely throughout the conditioned space, and that all supply registers and return air grilles are not blocked.
5. Make sure that the outdoor coil is not blocked with any foreign matter, or otherwise restricted with any growth or other items.

LUBRICATION REQUIREMENTS

All indoor and outdoor air-moving motors are permanently lubricated, and require no re-oiling. If an Energy Recovery Ventilator (ERV) is installed in your system, have your Service Company inspect annually and perform maintenance as outlined in the ERV Installation and Operating Instructions.

PERIODIC MAINTENANCE

Periodic maintenance must be conducted on your system to insure maximum performance, especially during peak operating periods and conditions.

1. Keeping the air filters clean and recognizing the importance of a clean outdoor coil are key elements. These are user responsibilities, either all or at least in part, and if they cannot be fulfilled by the user, arrangements should be made with your Service Company.
2. There is a condensate drain system for all air conditioners and heat pumps, and this must be kept open and free to convey the condensate generated by the operation of the equipment to a suitable location, typically either an internal drain or outdoor location. Depending upon the specific installation, the user would at least be aware of the dram mechanism and know what to expect.
   If any questions, it should be reviewed and discussed with your installer and/or Service Company.

3. All heating and cooling systems should have periodic inspections made by a trained professional, who has the experience, knowledge, training, licensing, certifications, and the necessary tools and equipment required to do these tasks properly and in accordance with approved or mandated procedures.
4. The maintenance procedures and frequency of routine service can vary depending upon actual type of equipment in use, type of building or facility, and other factors that can impact how often a machine must be serviced.
5. Proper and routine maintenance and service will protect your investment and help extend the service life of the product, and also help ward off more extensive and expensive repairs.

HELPFUL HINTS AND GOOD OPERATING PRACTICES

The following information will help you enjoy the full comfort and benefits of your Bard cooling and heating system, maximize the performance and efficiency, and help extend the life of your system:

1. Always keep the equipment in peak operating condition with routine scheduled maintenance, especially for the air filters and to assure clean outdoor coil.
2. For most efficient operation, set the thermostat at the temperature you prefer, and then let it take control. If any changes to the settings are required, they should be made in small adjustments and the system be allowed time to respond. Rapid changes either up or down should not be done.
3. Setting the thermostat very high does not make the system heat faster, and setting it very low does not make it cool faster.
4. It is not recommended to turn the system “Off” and then back “On” when you need it. This can allow temperature and humidity to build up in warm weather conditions and force the system to run continuously to try and catch up. If the building is to be unoccupied for a lengthy period, it is best to adjust the thermostat to a reasonable higher (or lower depending upon the season) setting rather than turning it completely off. Upon return, the inside conditions will not be totally out of control, and recovery time to desired conditions would be much shorter.
5. Keep all supply registers open and all returns free and unrestricted. The heating and cooling system is designed to have a certain amount of airflow for proper operation. Therefore, closing off registers, in unused rooms as an example, could reduce airflow below acceptable levels and should not be done without review by your Service Company who can access the overall situation and advise you accordingly.
6. Heat pumps, especially air-to-air heat pumps, may have the system (compressor) run continuously at lower outdoor temperatures, and this is normal. The heat pump (compressor) mode is controlled by the 1st stage of the thermostat, and delivers the most efficient heat. As the outdoor temperature drops off, the heat pump mode heat will also diminish (because there is less heat in the outdoor air to absorb), and must be supplemented by the 2nd stage electric heat, which is not as efficient as the heat pump. The thermostat automatically controls everything, and the backup electric heat will only operate on demand as needed to maintain the desired temperature.
7. The thermostat is the user’s primary connection to the system, so it is very important to have a thorough understanding of how it works and how to use it properly. Since there are many different types of controls available, and can vary depending upon what type of heating/cooling system you may have. Have your installer or Service Company explain and demonstrate proper operation of the controls.
8. Make sure you thoroughly understand how the heating and cooling system itself is intended to operate and what to expect from it. Have your installer or Service Company explain and demonstrate proper operation of the heating and cooling system.

SERVICING PROCEDURE

R-410A
LEAK TEST EVACUATION
CHARGING

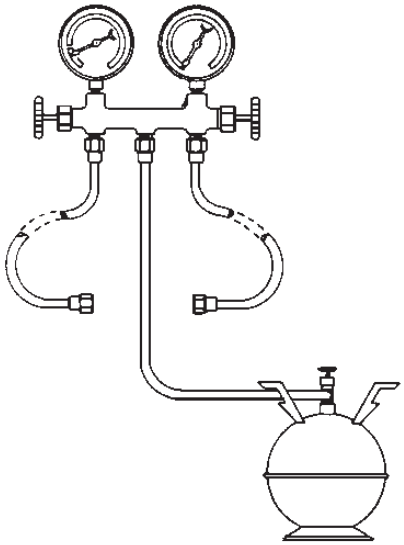

Bard Manufacturing Company, Inc.
Bryan, Ohio 43506

Since 1914...Moving ahead, just as planned.

Manual No.: 2100-479
Supersedes: NEW
File: Volume I, Tab 1
Date: 03-08-07

CONTENTS

General

Recovery Equipment Rated for R-410A.....3
Leak Detectors.....3
Gauge Manifold.....3
Attaching Gauge Manifold.....3
Attaching Manifold Hose to Schrader Valve.....4
Leak Test.....4
Evacuation ..... 4 & 5
Charging 5
Preliminary Charging Steps 5
Charging the System by Weight 5

Troubleshooting the Mechanical System
Air Conditioning & Heat Pump - Cooling.....9
Low Suction — Low Head Pressure 9
High Suction — Low Head Pressure 9
Low Suction — High Head Pressure 9
High Suction — High Head Pressure.....9
Heat Pump - Heating.....9
Low Suction — Low Head Pressure 9
High Suction — Low Head Pressure 9
Low Suction — High Head Pressure 9
High Suction — High Head Pressure.....9

Figures
Figure 1: Typical AC System Cooling Cycle.....6
Figure 2: Typical HP System Cooling Cycle 7
Figure 3: Heating Cycle 8

Charts
Troubleshooting Chart for Air Conditioners.....10
Troubleshooting Chart for Air-to-Air Heat Pumps....11

⚠ WARNING

The oils used with R-410A refrigerant are hydroscopic and absorb water from the atmosphere readily. Do not leave systems open to the atmosphere for more than 5 minutes. If the system has been open for more than 5 minutes, change the filter dryer immediately before evacuation. Then recharge the system to the factory specified charge.

Recovery equipment rated for R-410A refrigerant
R-410A has an ozone depletion potential of zero, but must be reclaimed due to its global warming potential.

The gauge manifold set is specially designed to withstand the higher pressure associated with R-410A. Manifold sets are required to range up to 800 psig on the high side and 250 psig on the low side with a 250 psig low side retard.

All hoses must have a service rating of 800 psig. (This information will be indicated on the hoses.)

Vacuum Pump and micron gauge must be used when evacuating a system to 500 microns.

Leak Detectors
An electronic leak detector capable of detecting HFC refrigerant can be used with R-410A refrigerant.

GAUGE MANIFOLD

⚠ WARNING

Gauge manifold must be suitable for use with R-410A refrigerant and POE oils.

A necessary instrument in checking and serving air conditioning and heat pump equipment is the gauge manifold. Its purpose is to determine the operating refrigerant pressures in order for the serviceman to analyze the condition of the system.

The valving on the manifold is so arranged that when the valves are closed (front-seated) the center port on the manifold is closed to the gauges and gauge ports. With the valves in the closed position, the gauge ports are still open to the gauges, permitting the gauges to register system pressures. Opening either valve opens the center port to that side of the manifold and system.

ATTACHING GAUGE MANIFOLD

For leak testing, purging, checking charge, charging liquid or evacuating, connect high pressure side of gauge manifold to Schrader valve on liquid or discharge line. Connect suction side of gauge manifold to Schrader valve on suction line. On heat pumps the suction line is between compressor and reversing valve.

ATTACHING MANIFOLD HOSE TO SCHRADER VALVE

WARNING

As a safety measure, it is wise to detach refrigerant hoses at the lowest pressure readings on the system. To do this:

A. Put high pressure hose “B” on first. (Unit should not be running.)

B. Put low pressure hose “A” on second. (Unit should be running.)

1. Remove cap from valve.
2. Make sure gauge manifold valves are closed.
3. If hose does not have an unseating pin, a number 395 Superior or equivalent unseating coupler must be used.
4. Make sure coupler is lined up straight with Schrader valve. Screw coupler on to valve.
5. Open gauge manifold valve slightly and purge air from hose with refrigerant.
6. Read the suction pressure on compound gauge and heat pressure on pressure gauge.
7. To remove, push end of hose tight against end of Schrader valve and hold in place while quickly unscrewing coupler nut from Schrader valve.
8. Remove coupler from Schrader valve. Replace caps on valve.

Leak Test

1. Remove gauge port cap from suction and liquid service valve ports and attach manifold gauge hoses. Connect an upright R-410A drum to center port of gauge manifold. Open refrigerant drum valve and manifold high pressure gauge valve to pressurize system to a positive pressure with refrigerant vapor. Pressurize the complete system with dry nitrogen, or CO2 until the pressure reaches 200 psig. **Do not** exceed 250 psig.
2. Close manifold high pressure gauge valve. Check all soldered joints, including those on the evaporator coil with an Electronic Leak Detector suitable for use with HFC refrigerants or R-410A. If a leak is found which requires soldering, pressure in the system must be bled off since it is impossible to solder with unit pressurized. Be sure all leaks are located and marked before bleeding pressure from system.
3. Close drum valve and disconnect from center port. Release nitrogen or CO2 into the atmosphere through suction line of gauge manifold.
4. Correct any leaks and recheck. When leaks, if any, have been repaired, system is ready to be evacuated and charged. Relieve all pressure from the system down to 0 psig.
5. Change the dryer. When leaks, if any, have been repaired, system is ready to be evacuated and charged. Relieve all pressure from the system down to 0 psig.

EVACUATION

Evacuation

An evacuation to 500 microns is usually to remove moisture from a system using R-22 and mineral oil lubricant. A 500 micron evacuation, however, will not separate moisture from Polyol Ester oil (POE) in R-410A systems.

In addition to a 500 micron evacuation, the liquid line dryer (R-410A compatible) must be replaced any time the system is open. When removing a dryer from a system, do not use a torch; use a tubing cutter to avoid releasing moisture back into the system.

Older R-22 leak detectors, as well as halide torch leak detectors, will not detect leaks in R-410A systems. Never use air and R-410A to leak check, as the mixture may become at pressures above 1 atmosphere. A system can be safely leak-checked by using nitrogen or a trace gas of R-410A and nitrogen.

Remember: *Always use a pressure regulator with nitrogen and a safety valve down stream - set at no more than 150 psig.*

1. Evacuate system to less than 500 microns, using a good vacuum pump and an accurate high vacuum gauge. Operate the pump below 500 microns for 60 minutes and then close valve to the vacuum pump. Allow the system to stand for 30 additional minutes to be sure a 500 micron vacuum or less is maintained.

WARNING

At no time use the compressor to evacuate the system or any part of it.

2. Disconnect charging line at vacuum pump and connect to refrigerant supply. Crack the cylinder valve and purge charging line at center on manifold. Then close cylinder valve.
3. The system is now ready for the correct operating charge of Refrigerant R-410A.

R-410A System Charging

Even though R-410A has a very small fractionation potential, it cannot be ignored completely when charging. To avoid fractionation, charging of an air conditioner or heat pump system incorporating R-410A **shall be done with "liquid"** to maintain optimum system performance. To insure that the proper blend composition is charged into the system, it is important that liquid only be removed from the charging cylinder. Some cylinders supplied by manufacturers have dip tubes, which allow liquid refrigerant to be removed from the cylinder when it is in the upright position. Cylinders without dip tubes have to be tipped upside down in order for liquid to be removed. The Service Technician must differentiate between which type of charging cylinder they are using to avoid removing vapor refrigerant instead of liquid refrigerant to avoid fractionation and for safety concerns.

Connect the gauge manifold to the high and low side. Allow liquid to enter the high side only. The high side will hold 80-100% of the total charge. When liquid stops close high side port. The remainder of the charge will be added to the low side. Keep in mind two issues: never start the compressor with less than 55 psig of suction pressure. Secondly, make sure the liquid is throttled, thus vaporized into the low side of the system to avoid compressor damage. A throttling valve can be used to insure that liquid is converted to vapor prior to entering the system. Proper manipulation (restricting) of the manifold gauge set can also act as a throttling device to insure liquid is not entering the compressor.

CHARGING

1. **Single Package Units**—Refer to the unit serial plate for the full operating charge.

PRELIMINARY CHARGING STEPS

If the system has been open to the atmosphere, the dryer should be replaced and then evacuated. Then proceed as follows:

1. Attach a drum of proper, clean refrigerant to the center port of the charging manifold with one of the charging hoses.
2. Attach a second charging hose to the suction gauge (low pressure) side of the gauge manifold.
3. Remove the cap from the suction line valve.
4. Loosely attach the suction gauge hose to the line valve. Open the valve on the refrigerant drum and the suction valve on the charging manifold slightly to purge the air from the manifold and hoses before tightening the
5. Attach the third hose to the high pressure side of the manifold and the liquid line valve. Repeat steps 3 and 4 above.

CHARGING THE SYSTEM BY WEIGHT

1. Connect manifold as instructed.
2. Place refrigerant drum upright on scale and determine exact weight of the refrigerant and cylinder.
3. With manifold suction valve closed and manifold discharge valve open, open refrigerant cylinder liquid valve and allow pressure in system to balance with pressure of cylinder or 80% of charge is in the unit - whichever comes
4. When there is approximately an 80% charge, front seat (close) the discharge manifold valve and let the system stabilize for about minutes.
5. Start compressor by setting thermostat.
6. Finish charging with liquid by cracking the suction valve. Open the manifold low pressure valve to allow refrigerant to into the system. Throttle the manifold valve to keep pressure about 100 psig for R-410A.
7. When the correct weight of refrigerant has been added to the unit, close refrigerant cylinder valve and allow unit to run for 30 minutes. Refer to Start-Up Procedure and Check List for further start-up details.
8. Front seat gauge manifold valves, disconnect charging and gauge hoses and replace all valve caps.

FIGURE 1
TYPICAL AIR CONDITIONING SYSTEM COOLING CYCLE

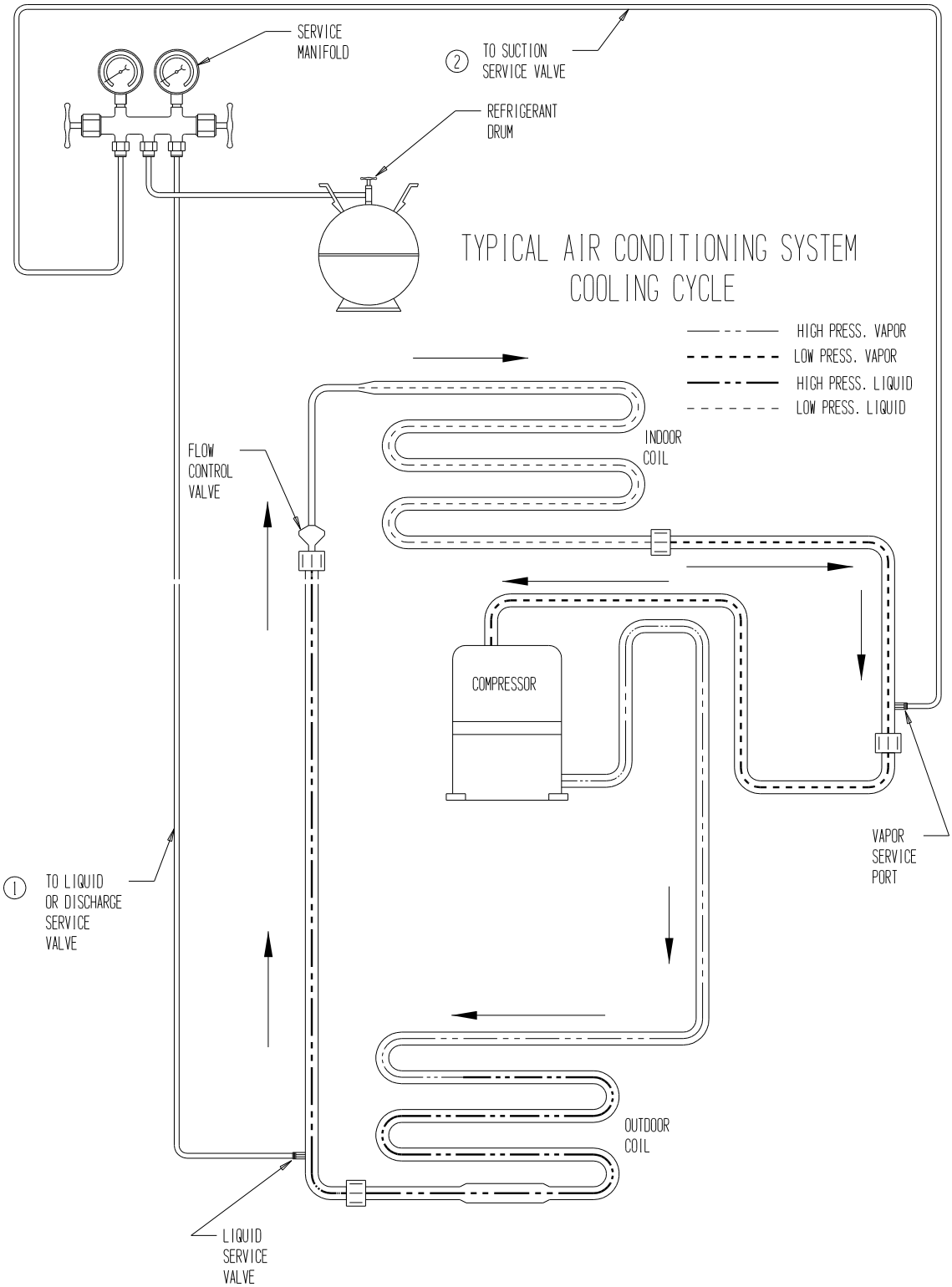

MIS-369

FIGURE 2
TYPICAL HEAT PUMP SYSTEM COOLING CYCLE

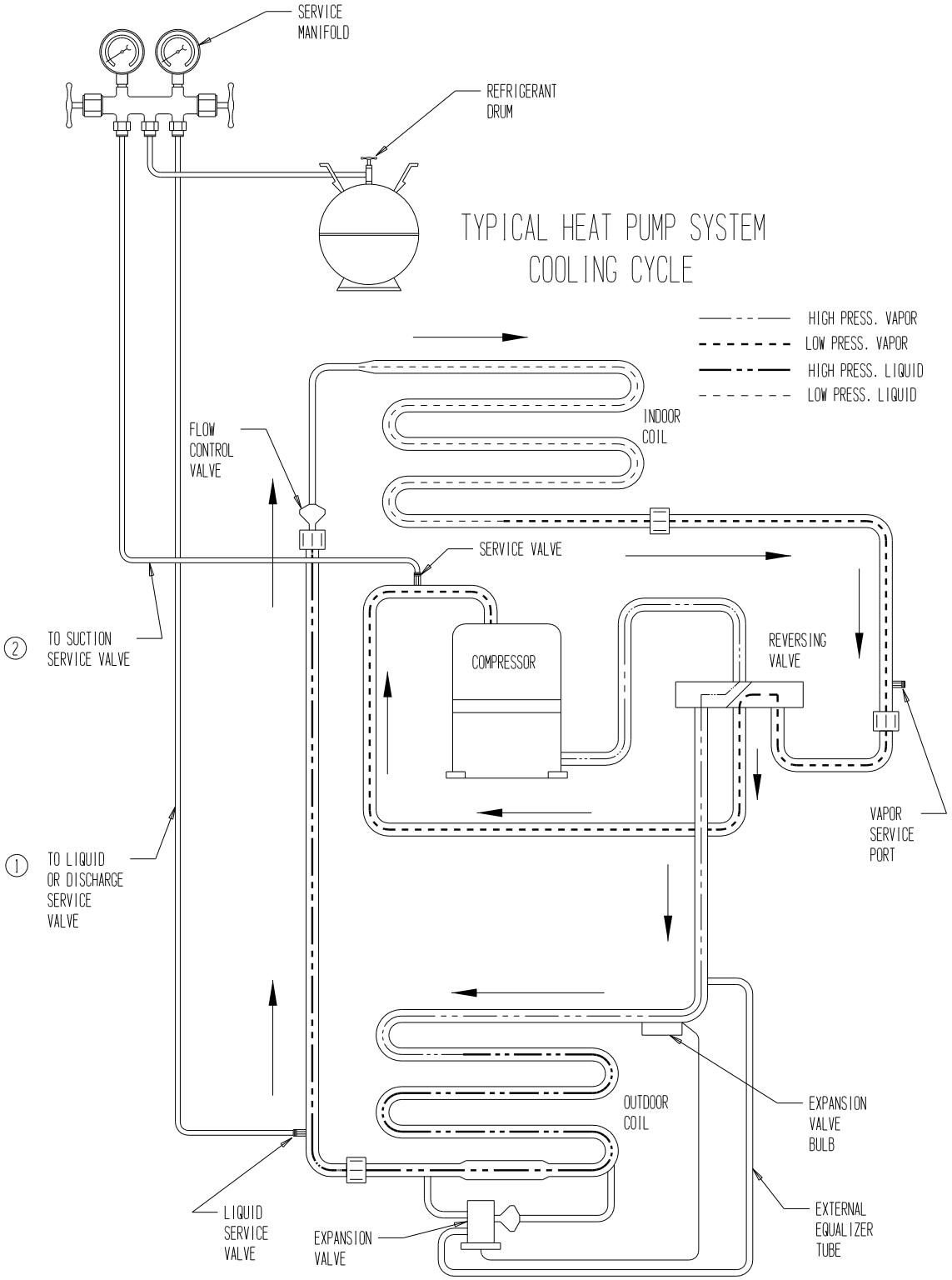

MIS-368

⚠ WARNING

To speed refrigerant flow, it may be necessary to place refrigerant drum in a pan of warm water (not greater than 130ºF). Remember to either consider the total weight of the pan of water or remove the drum for weighing frequently to keep track of the charging process.

FIGURE 3
HEATING CYCLE

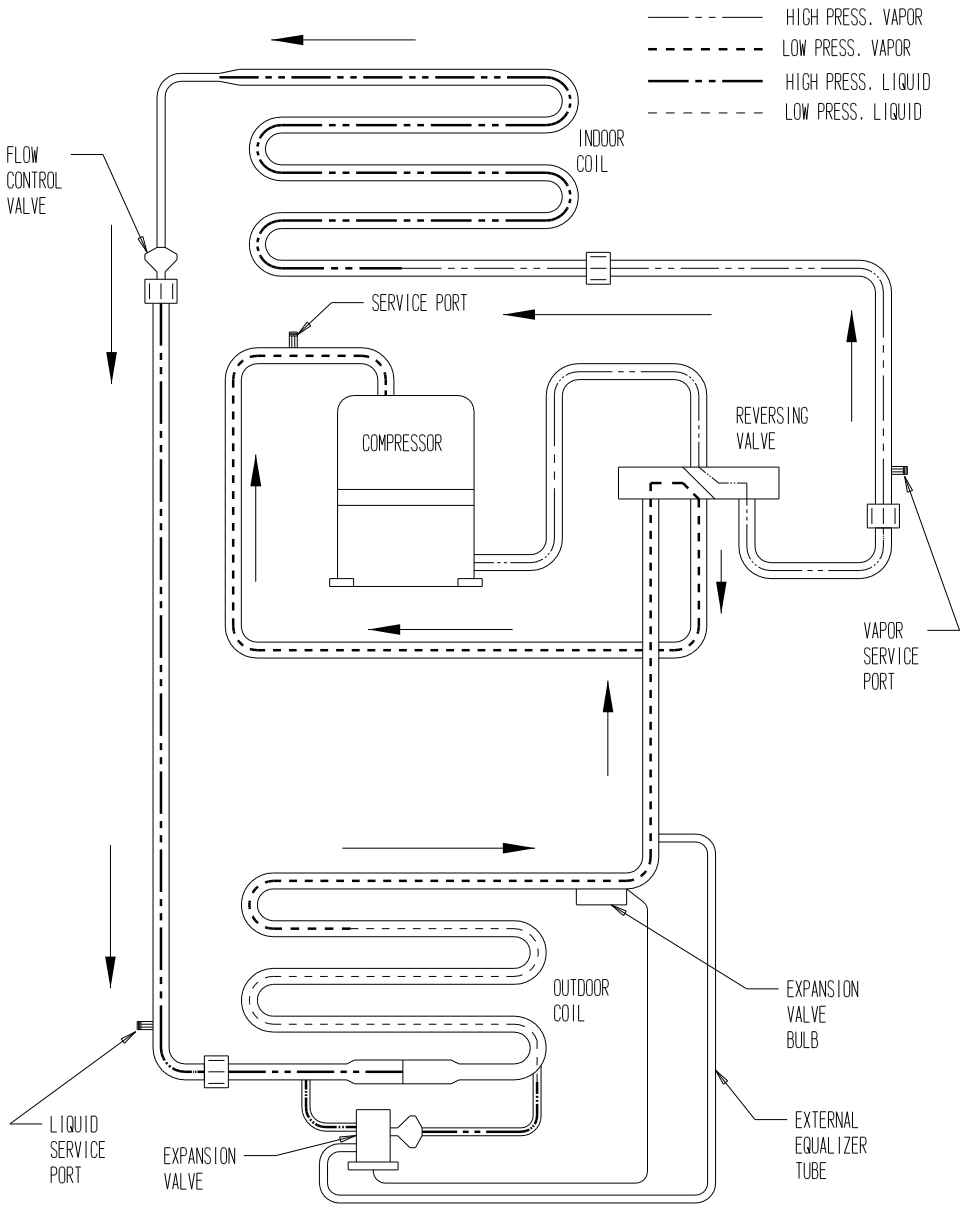

MIS-289

AIR CONDITIONING AND HEAT PUMP — COOLING

LOW SUCTION—LOW HEAD PRESSURE

1. Restricted over indoor coil.
2. Defective indoor fan motor.
3. Low indoor temperature
4. Iced indoor coil.
5. Restricted liquid line, dryer, metering device, etc.
6. Low charge.
7. Low ambient entering air temperature. (Low entering water temperature to water coil.①)

HIGH SUCTION—LOW HEAD PRESSURE

1. Defective or broken valves.
2. IPRV valve open.
3. Defective reversing valve.

LOW SUCTION—HIGH HEAD PRESSURE

1. Partial restriction and then overcharged.

HIGH SUCTION—HIGH HEAD PRESSURE

1. High entering outdoor air temperature. (High entering water temperature.①)
2. Low outdoor coil. (Low water .①)
3. Overcharged.
4. Air in system.
5. Restricted outdoor coil. (Restricted water coil.①)
6. High indoor air temperature.

① Water source heat pump.

HEAT PUMP — HEATING

LOW SUCTION—LOW HEAD PRESSURE

1. Restricted through outdoor coil. (Restricted water through water coil.①)
2. Defective outdoor motor. (Defective water pump.①)
3. Low outdoor air temperature. (Low water temperature.①)
4. Frozen outdoor coil. (Frozen water coil.①)
5. Restricted liquid line, dryer, metering device, etc.
6. Low charge.
7. Low indoor air temperature.

HIGH SUCTION—LOW HEAD PRESSURE

1. Defective or broken valves.
2. IPR valve open.
3. Defective reversing valve.

LOW SUCTION—HIGH HEAD PRESSURE

1. Partial restriction and then overcharged.

HIGH SUCTION—HIGH HEAD PRESSURE

1. High entering outdoor air temperature. (High entering water temperature.①)
2. Low indoor .
3. Overcharged.
4. Air in system.
5. Restricted air coil.
6. High indoor air temperature.

① Water source heat pump.

TROUBLESHOOTING CHART FOR AIR CONDITIONERS

● Generally the cause. Always make these checks first.

◆ Occasionally the cause. Make these checks only if first checks fail to locate trouble.

■ Rarely the cause. Make this check only if previous checks fail to locate trouble.

	Power Supply																														High Pressure Side of System															Low Side						General					
	Meter to Line Side of Contactor								Load Side of Contactor to Motor Terminal										Control Circuit										Motors				Compressor						System Operation								Condenser Air						Evaporator Air											
	Power Failure	Blown Fuses or Tripped Circuit Breakers	Faulty Wiring	Loose Terminals	Low Voltage	Single 1PH Failure of 3PH	Unbalanced Power Supply 3PH	Voltage Too High	Open Disconnect Switch	Faulty Wiring	Loose Terminal	Low Voltage	Defective Contacts in Contactor	Compressor Overload	Potential Relay Fails to Open	Potential Relay Fails to Close	Run Capacitor	Start Capacitor	Faulty Wiring	Loose Terminals	Control Transformer	Low Voltage	Thermostat	Contactor Coil	Pressure Control	Condenser Fan Relay	Evaporator Fan Relay	Compressor Motor	Condenser Motor	Evaporator Motor	Compressor Off on Internal Overload	Hold Down Bolts	Defective Compressor Bearings	Seized Compressor	Defective Compressor Valves	Compressor Oil Level	Open or Short Motor Windings	Refrigerant Charge Low	Overcharge of Refrigerant	High Head Pressure	High Suction Pressure	Low Suction Pressure	Temperatures	Non-Condensables (Air, etc.)	Excessive Load in Space	Liquid Valve Partially Closed	Condenser Fins Dirty or Plugged	Condenser Fan Belt Slipping	Condenser Air Short Circuiting	Low Condenser Air Volume	Condenser Air Temperature Low	Plugged or Restricted Metering Device	Evaporator Fins Dirty or Plugged	Evaporator Belt Slipping	Low Evaporator Air Volume	Dirty Filters	Ductwork Small or Restricted	Restrictions	Thermostat Setting	Thermostat Location	Stratified Air in Space	Incorrect Refrigerant Piping	System Too Small
Compressor and condenser fan motor will not start	●	●	●	●	◆	■	■		●	●	●	◆	◆	●					●	●	●	◆	◆	●	●				■	■								●	■	●		●		●			■	■	■	■										■				
Compressor will not start but condenser fan will run				◆	◆	◆	◆			●	●	◆	◆	●		◆	●	●										●					●	●			●																								
Condenser fan motor will not start										●	●															●			●																															
Compressor "hums" but will not start			●	●	◆	◆	◆			●	●	◆	◆	●	●			●										◆					●	◆			◆		■	■		■	■																		
Compressor cycles on overload			●	●	●	■	●			●	●	●	●	◆	●		●											◆							■	■	◆	◆	◆	◆	◆			◆	◆		■	■	■	■	■									■				
Compressor short cycles on low pressure																																					●				●											●	●	●	●	●	●	●			■	
Compressor runs continuously—no cooling																																			●		●			◆			◆			■	■	■	■	■	◆	●	●	●	●	●	◆	■	◆	◆		
Compressor runs continuously—cooling																			●				●																					●														●		◆
Compressor noisy																	◆															●	●		●	●																									◆	
Compressor loses oil																																					●				●												■	■	■	■	■	◆				●	
Head pressure too high																																				■		●				●	●	◆		●	●	◆	●		◆						■				
Head pressure too low																																			◆		●				●									●												
Liquid line frosting or sweating																																													●						◆						●				
Suction pressure too high																																			●			◆	●			◆		●																	
Suction pressure too low																																					●					◆									◆	◆	●	●	●	●	◆			◆	■
Evaporator frosting																														◆							◆				●	◆									◆	◆	●	●	●	●	◆			◆	■
Suction line frosting or sweating																																						●													◆ ●	●	●	◆ ●	■					
Evaporator blower will not start	●	●	●	●	■	■				●	●	■							●	●	●	■	■				●			●																															
Condenser fan motor runs contactor not pulled in																															●																													
Liquid refrigerant flooding back to compressor—cap tube system																																						●					■									◆	◆	◆	◆	◆				■	
Space temperature too high																							●												◆		●				●										◆	●	●	●	●	●		●	◆	◆	■	●

TROUBLESHOOTING CHART FOR AIR TO AIR HEAT PUMPS

● Denotes common cause.

◆ Denotes occasional cause.

		Power Supply																			
		Line Voltage												Control Circuit							
Cycle	Symptom	Power Failure	Blown Fuse or Tripped Breaker	Faulty Wiring	Loose Terminals	Low Voltage	Single 1PH Failure of 3PH	Unbalanced 3PH	Defective Contacts in Contactor	Compressor Overload	Potential Relay	Run Capacitor	Start Capacitor	Faulty Wiring	Loose Terminals	Control Transformer	Low Voltage	Thermostat	Contactor Coil	Pressure Control or Impedance Relay	Indoor Fan Relay
Heating or Cooling Cycles	Compressor and O.D. fan motor do not operate	●	●	●	●		◆	◆	◆	◆				●	●	●	◆	◆	●	●	
Heating or Cooling Cycles	Compressor will not run O.D. fan motor runs			●	●	●	◆	◆		●	●	●	●								
Heating or Cooling Cycles	Compressor "hums" but will not start			●	●	●	●	◆	◆		●	●	●								
Heating or Cooling Cycles	Compressor cycles on overload			●	●	●	◆	◆	◆	●	●	●	●								
Heating or Cooling Cycles	Compressor off on high pressure control																			◆	●
Heating or Cooling Cycles	Compressor noisy																				
Heating or Cooling Cycles	Head pressure too high																				
Heating or Cooling Cycles	Head pressure too low																				
Heating or Cooling Cycles	Suction pressure too high																				
Heating or Cooling Cycles	Suction pressure too low																				
Heating or Cooling Cycles	I.D. blower will not start	●	●	●	●									●	●	●	◆	◆			●
Heating or Cooling Cycles	I.D. coil frosting or icing-																				
Heating or Cooling Cycles	High compressor amps					●															
Cooling Cycle	Compressor runs continuously—no cooling																				
Cooling Cycle	Liquid refrigerant flooding back to compressor																				
Heating Cycle	Compressor runs continuously—no heating																				
Heating Cycle	Defrost cycle initiates no ice on coil																				
Heating Cycle	Reversing valve does not shift			●	●																
Heating Cycle	Ice build up on lower part of O.D. coil																				
Heating Cycle	Liquid refrigerant flooding back to compressor																				
Heating Cycle	Auxiliary heat on I.D. blower off			●	●									●	●			◆			●
Heating Cycle	Excessive operating costs			◆	◆													◆			
Heating Cycle	Excessive ice on O.D. coil			◆	◆																

		Outdoor Section												
		Compressor					Refrigerant System							
Cycle	Symptom	Discharge Line Hitting Inside of Shell	Bearings Defective	Seized	Valve Defective	Motor Windings Defective	Refrigerant Charge Low	Refrigerant Overcharge	High Head Pressure	Low Head Pressure	High Suction Pressure	Low Suction Pressure	Non-Condensables	Unequalized Pressures
Heating or Cooling Cycles	Compressor and O.D. fan motor do not operate													
Heating or Cooling Cycles	Compressor will not run O.D. fan motor runs		◆	●		●								●
Heating or Cooling Cycles	Compressor "hums" but will not start		●	●		●								●
Heating or Cooling Cycles	Compressor cycles on overload		◆		◆	◆	●	●	◆		◆		●	
Heating or Cooling Cycles	Compressor off on high pressure control							●					●	
Heating or Cooling Cycles	Compressor noisy	◆	◆		●									
Heating or Cooling Cycles	Head pressure too high							●					●	
Heating or Cooling Cycles	Head pressure too low				●		●					●		
Heating or Cooling Cycles	Suction pressure too high				●			●	●					
Heating or Cooling Cycles	Suction pressure too low						●			◆				
Heating or Cooling Cycles	I.D. blower will not start													
Heating or Cooling Cycles	I.D. coil frosting or icing-						●					●		
Heating or Cooling Cycles	High compressor amps		●	●				●	●		●		●	
Cooling Cycle	Compressor runs continuously—no cooling				●		●							
Cooling Cycle	Liquid refrigerant flooding back to compressor							●	●					
Heating Cycle	Compressor runs continuously—no heating				●		●							
Heating Cycle	Defrost cycle initiates no ice on coil						◆							
Heating Cycle	Reversing valve does not shift						◆			◆				
Heating Cycle	Ice build up on lower part of O.D. coil						●					◆		
Heating Cycle	Liquid refrigerant flooding back to compressor							●	●					
Heating Cycle	Auxiliary heat on I.D. blower off													
Heating Cycle	Excessive operating costs						●	●						
Heating Cycle	Excessive ice on O.D. coil						●							

		Outdoor Section												
		Defrost Control			Rev. Valve		Check Valve		Outdoor Fan Motor and Coil					
Cycle	Symptom	Sensing Bulb Loose-Poorly Located	Cycle Too Long (Clock timer)	Defective Control, Timer or Relay	Leaking	Defective Valve or Coil	Sticking Closed	Leaking or Defective	Plugged or Restricted Meter Device (Htg)	Fins Dirty or Plugged	Motor Winding Defective	Recirculation or Air	Air Volume Low (Cooling)	Low Temperature Coil Air (Cooling)
Heating or Cooling Cycles	Compressor and O.D. fan motor do not operate													
Heating or Cooling Cycles	Compressor will not run O.D. fan motor runs													
Heating or Cooling Cycles	Compressor "hums" but will not start													
Heating or Cooling Cycles	Compressor cycles on overload				◆					◆	◆	◆	◆	
Heating or Cooling Cycles	Compressor off on high pressure control	◆	●	●			●		◆	●	●	●	●	
Heating or Cooling Cycles	Compressor noisy													
Heating or Cooling Cycles	Head pressure too high	◆	◆			◆	◆		◆	●	●	◆	●	
Heating or Cooling Cycles	Head pressure too low				●			◆						●
Heating or Cooling Cycles	Suction pressure too high				●			◆						
Heating or Cooling Cycles	Suction pressure too low						◆		◆	●	●	◆		◆
Heating or Cooling Cycles	I.D. blower will not start													
Heating or Cooling Cycles	I.D. coil frosting or icing-						◆							
Heating or Cooling Cycles	High compressor amps						◆							
Cooling Cycle	Compressor runs continuously—no cooling									◆	◆	◆	◆	◆
Cooling Cycle	Liquid refrigerant flooding back to compressor													
Heating Cycle	Compressor runs continuously—no heating		◆	◆	●									
Heating Cycle	Defrost cycle initiates no ice on coil			●										
Heating Cycle	Reversing valve does not shift					●								
Heating Cycle	Ice build up on lower part of O.D. coil	●	●	●										
Heating Cycle	Liquid refrigerant flooding back to compressor													
Heating Cycle	Auxiliary heat on I.D. blower off													
Heating Cycle	Excessive operating costs			●	●	●				◆	◆	◆		
Heating Cycle	Excessive ice on O.D. coil	●	●	●		●								

		Indoor Section								Aux. Heat
		Indoor Blower Motor and Coil						Check		
Cycle	Symptom	Plugged or Restricted Metering Device (Clg)	Fins Dirty or Plugged	Motor Winding Defective	Air Volume Low	Air Filters Dirty	Undersized or Restricted Ductwork	Sticking Closed	Leaking or Defective	Auxiliary Heat Upstream of Coil
Heating or Cooling Cycles	Compressor and O.D. fan motor do not operate									
Heating or Cooling Cycles	Compressor will not run O.D. fan motor runs									
Heating or Cooling Cycles	Compressor "hums" but will not start									
Heating or Cooling Cycles	Compressor cycles on overload		◆	◆	◆	●	◆			
Heating or Cooling Cycles	Compressor off on high pressure control	◆	●	●	●	●	●	●		●
Heating or Cooling Cycles	Compressor noisy									
Heating or Cooling Cycles	Head pressure too high	◆	◆	◆	●	●	◆	◆		●
Heating or Cooling Cycles	Head pressure too low								◆	
Heating or Cooling Cycles	Suction pressure too high								◆	
Heating or Cooling Cycles	Suction pressure too low	◆	●	◆	●	●	◆	◆		
Heating or Cooling Cycles	I.D. blower will not start									
Heating or Cooling Cycles	I.D. coil frosting or icing-	◆	●	●	●	●	◆			
Heating or Cooling Cycles	High compressor amps		●	●	●	●	◆	◆		
Cooling Cycle	Compressor runs continuously—no cooling		●	●	●	●	◆			
Cooling Cycle	Liquid refrigerant flooding back to compressor		●	●	●	●	◆	◆		
Heating Cycle	Compressor runs continuously—no heating									
Heating Cycle	Defrost cycle initiates no ice on coil									
Heating Cycle	Reversing valve does not shift									
Heating Cycle	Ice build up on lower part of O.D. coil									
Heating Cycle	Liquid refrigerant flooding back to compressor									
Heating Cycle	Auxiliary heat on I.D. blower off			●						
Heating Cycle	Excessive operating costs		◆	◆	◆					
Heating Cycle	Excessive ice on O.D. coil									

REPLACEMENT PARTS MANUAL

WALL MOUNTED
PACKAGE AIR CONDITIONER

Models:

W42L2-A	W48L2-A	W60L2-A	W70L2-A
W42L2-B	W48L2-B	W60L2-B	W70L2-B
W42L2-C	W48L2-C	W60L2-C	W70L2-C
W42L2-F	W48L2-F	W60L2-F	W70L2-F

General Notes

- Revised and/or additional pages may be issued from time to time.
- A complete and current manual consists of pages shown in the following contents section.

Important

- Contact the installing and/or local Bard distributor for all parts requirements. Make sure to have the complete model and serial number available from the unit rating plates.

Contents

Description **Page**

Cabinet Components
- Exploded View 2
- Usage List 3
- Usage List 4

Functional Components
- Exploded View 5
- Usage List 6
- Usage List 7

Control Panel
- Exploded View 8
- Usage List 9
- Usage List 10

Blower Assembly
- Exploded View 11
- Usage List 11

Bard® SINCE 1914
Climate Control Solutions

Bard Manufacturing Company, Inc.
Bryan, Ohio 43506
www.bardhvac.com

Manual: 2110-1406G
Supersedes: 2110-1406F
Date: 5-11-18

CABINET COMPONENTS

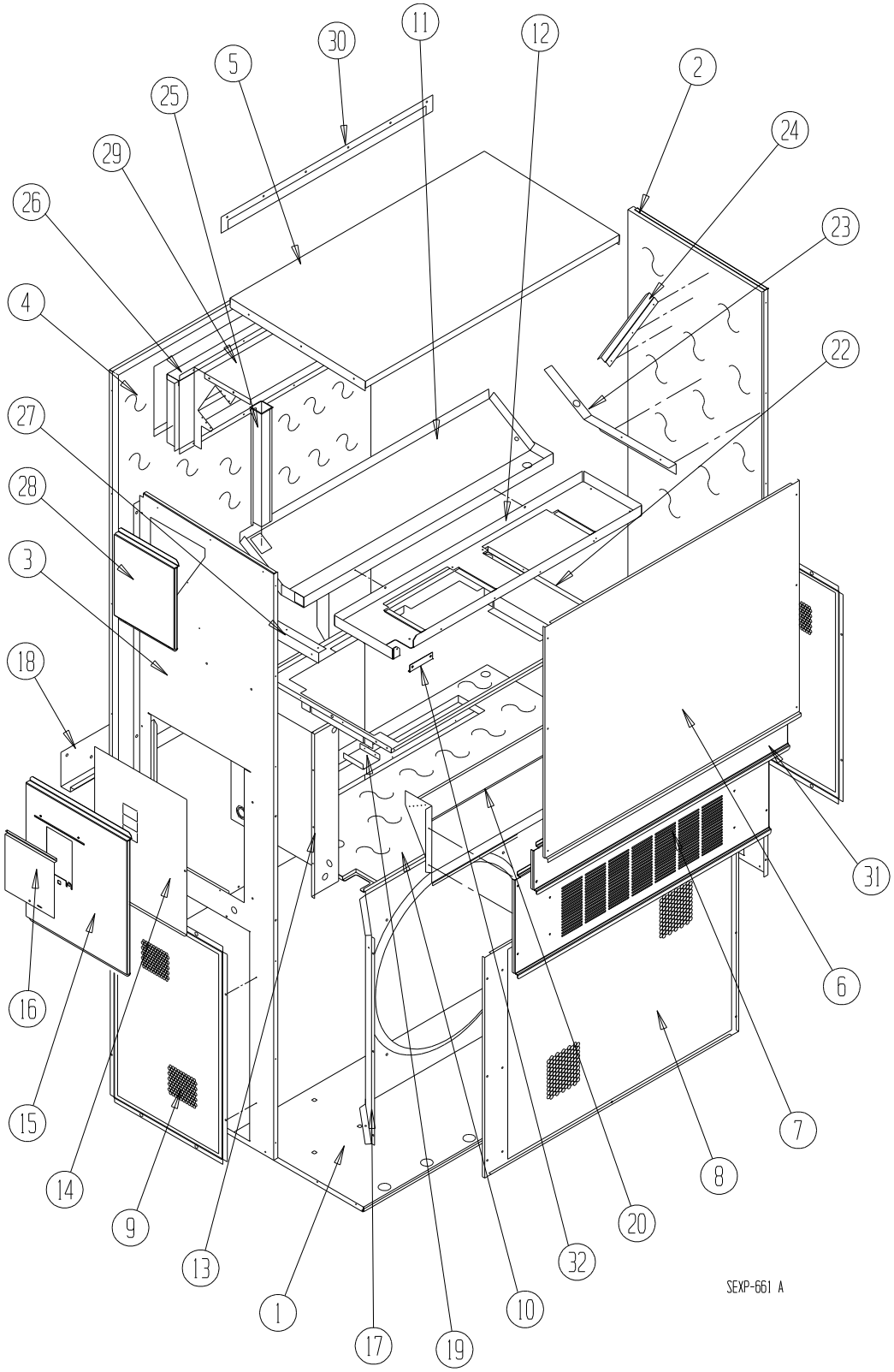

Dwg No.	Part Number	Description	W42L2-A, B	W42L2-C, F	W48L2-A, B	W48L2-C, F	W60L2-A, B	W60L2-C, F
1	127-428	Lower Base	X	X	X	X	X	X
1	127-436 ③	Lower Base	X	X	X	X	X	X
2	S501-687-* ①	Right Side	X	X	X	X	X	X
2	S501-713 ②	Right Side	X	X	X	X	X	X
2	S501-715 ③	Right Side	X	X	X	X	X	X
3	S501-680-* ①	Left Side	X	X	X	X	X	X
3	S501-714 ②	Left Side	X	X	X	X	X	X
3	S501-716 ③	Left Side	X	X	X	X	X	X
4	S508-098	Back	X	X	X	X	X	X
4	S508-275 ②	Back	X	X	X	X	X	X
4	S508-221 ③	Back	X	X	X	X	X	X
5	S507-307-* ①	Top	X	X	X	X	X	X
5	S507-309 ②	Top	X	X	X	X	X	X
5	S507-310 ③	Top	X	X	X	X	X	X
6	S515-230-* ①	Upper Front	X	X	X	X	X	X
6	S514-231 ②	Upper Front	X	X	X	X	X	X
6	S514-232 ③	Upper Front	X	X	X	X	X	X
7	S553-522-* ①	Vent Option Door	X	X	X	X	X	X
7	S553-525 ②	Vent Option Door	X	X	X	X	X	X
7	S553-527 ③	Vent Option Door	X	X	X	X	X	X
8	118-049-* ①	Condenser Grille	X	X	X	X	X	X
8	118-065 ②	Condenser Grille	X	X	X	X	X	X
8	118-074 ③	Condenser Grille	X	X	X	X	X	X
9	118-057-* ①	Side Grille	2	2	2	2	2	2
9	118-063 ②	Side Grille	2	2	2	2	2	2
9	118-073 ③	Side Grille	2	2	2	2	2	2
10	S521Y462	Condenser Partition	X	X	X	X	X	X
11	S123-121	Drain Pan	X	X	X	X	X	X
11	S123-137 ②③	Drain Pan	X	X	X	X	X	X
12	121Y463	Blower Partition	X	X	X	X	X	X
13	Control Panel Assy.	See Control Panel Assy. Drawing & Parts List	X	X	X	X	X	X
14	S133-114	Control Panel Cover (Inner)	X		X		X	
14	S133-171	Control Panel Cover (Inner)		X		X		X
15	S533-227-* ①	Control Panel Cover (Outer)	X	X	X	X	X	X
15	S533-231 ②	Control Panel Cover (Outer)	X	X	X	X	X	X
15	S533-233 ③	Control Panel Cover (Outer)	X	X	X	X	X	X
16	S153-218-* ①	Disconnect Access Door	X	X	X	X	X	X
16	S153-387 ②	Disconnect Access Door	X	X	X	X	X	X
16	S153-405 ③	Disconnect Access Door	X	X	X	X	X	X
17	125-024	Fan Shroud	X	X	X	X	X	X
17	125-058 ③	Fan Shroud	X	X	X	X	X	X
18	113-140	Bottom Mounting Bracket	X	X	X	X	X	X
19	137-209	Fill	X	X	X	X	X	X
20	BFAD-5	Fresh Air Damper Assembly	X	X	X	X	X	X
22	131Y099	Filter Tray	X	X	X	X	X	X
23	105Y878	Left Side Support	X	X	X	X	X	X
24	147-046	Left Evaporator Support	X	X	X	X	X	X
25	135-128	Raceway	2	2	2	2	2	2
26	S111Y034	Outlet Air Frame Assembly	X	X	X	X	X	X
27	105Y877	Right Side Support	X	X	X	X	X	X
28	S543-172-* ①	Right Side Cover Plate (Outer)	X	X	X	X	X	X
28	S543-176 ②	Right Side Cover Plate (Outer)	X	X	X	X	X	X
28	S543-177 ③	Right Side Cover Plate (Outer)	X	X	X	X	X	X
29	135-129	Heat Shield	X	X	X	X	X	X
30	113-150-* ①	Top Rain Flashing	X	X	X	X	X	X
30	113-359 ③	Top Rain Flashing	X	X	X	X	X	X
31	S553-521-* ①	Filter Door Assembly	X	X	X	X	X	X
31	S553-526 ②	Filter Door Assembly	X	X	X	X	X	X
31	S553-528 ③	Filter Door Assembly	X	X	X	X	X	X
32	105-1302	Grommet Retainer	X	X	X	X	X	X
NS	S536-498	Cond. Partition Block Off Plate	X	X	X	X	X	X

① *Exterior cabinet parts are manufactured with various paint color options. To ensure the proper paint color is received, include the complete model and serial number of the unit for which cabinet parts are being ordered.*

② *Exterior cabinet parts are manufactured from aluminum Code "A"*

③ *Exterior cabinet parts are manufactured from stainless steel Code "S"*

NS – Not Shown

CABINET COMPONENTS

Dwg No.	Part Number	Description	W70L2-A, B	W70L2-C, F
1	127-428	Lower Base	X	X
1	127-436 ③	Lower Base	X	X
2	S501-687-* ①	Right Side	X	X
2	S501-713 ②	Right Side	X	X
2	S501-715 ③	Right Side	X	X
3	S501-680-* ①	Left Side	X	X
3	S501-714 ②	Left Side	X	X
3	S501-716 ③	Left Side	X	X
4	S508-098	Back	X	X
4	S508-275 ②	Back	X	X
4	S508-221 ③	Back	X	X
5	S507-307-* ①	Top	X	X
5	S507-309 ②	Top	X	X
5	S507-310 ③	Top	X	X
6	S515-230-* ①	Upper Front	X	X
6	S514-231 ②	Upper Front	X	X
6	S514-232 ③	Upper Front	X	X
7	S553-522-* ①	Vent Option Door	X	X
7	S553-525 ②	Vent Option Door	X	X
7	S553-527 ③	Vent Option Door	X	X
8	118-049-* ①	Condenser Grille	X	X
8	118-065 ②	Condenser Grille	X	X
8	118-074 ③	Condenser Grille	X	X
9	118-057-* ①	Side Grille	2	2
9	118-063 ②	Side Grille	2	2
9	118-073 ③	Side Grille	2	2
10	S521Y462	Condenser Partition	X	X
11	S123-121	Drain Pan	X	X
11	S123-137 ②③	Drain Pan	X	X
12	121Y463	Blower Partition	X	X
13	Control Panel Assy.	See Control Panel Assy. Drawing & Parts List	X	X
14	S133-114	Control Panel Cover (Inner)	X	
14	S133-171	Control Panel Cover (Inner)		X
15	S533-227-* ①	Control Panel Cover (Outer)	X	X
15	S533-231 ②	Control Panel Cover (Outer)	X	X
15	S533-233 ③	Control Panel Cover (Outer)	X	X
16	S153-218-* ①	Disconnect Access Door	X	X
16	S153-387 ②	Disconnect Access Door	X	X
16	S153-405 ③	Disconnect Access Door	X	X
17	125-085	Fan Shroud	X	X
17	125-058 ③	Fan Shroud	X	X
18	113-140	Bottom Mounting Bracket	X	X
19	137-209	Fill	X	X
20	BFAD-5	Fresh Air Damper Assembly	X	X
22	131Y099	Filter Tray	X	X
23	105Y878	Left Side Support	X	X
24	147-046	Left Evaporator Support	X	X
25	135-128	Raceway	2	2
26	S111Y034	Outlet Air Frame Assembly	X	X
27	105Y877	Right Side Support	X	X
28	S543-172-* ①	Right Side Cover Plate (Outer)	X	X
28	S543-176 ②	Right Side Cover Plate (Outer)	X	X
28	S543-177 ③	Right Side Cover Plate (Outer)	X	X
29	135-129	Heat Shield	X	X
30	113-150-* ①	Top Rain Flashing	X	X
30	113-359 ③	Top Rain Flashing	X	X
31	S553-521-* ①	Filter Door Assembly	X	X
31	S553-526 ②	Filter Door Assembly	X	X
31	S553-528 ③	Filter Door Assembly	X	X
32	105-1302	Grommet Retainer	X	X
NS	S536-498	Cond. Partition Block Off Plate	X	X

① *Exterior cabinet parts are manufactured with various paint color options. To ensure the proper paint color is received, include the complete model and serial number of the unit for which cabinet parts are being ordered.*
② *Exterior cabinet parts are manufactured from aluminum Code "A"*
③ *Exterior cabinet parts are manufactured from stainless steel Code "S"*

NS – Not Shown

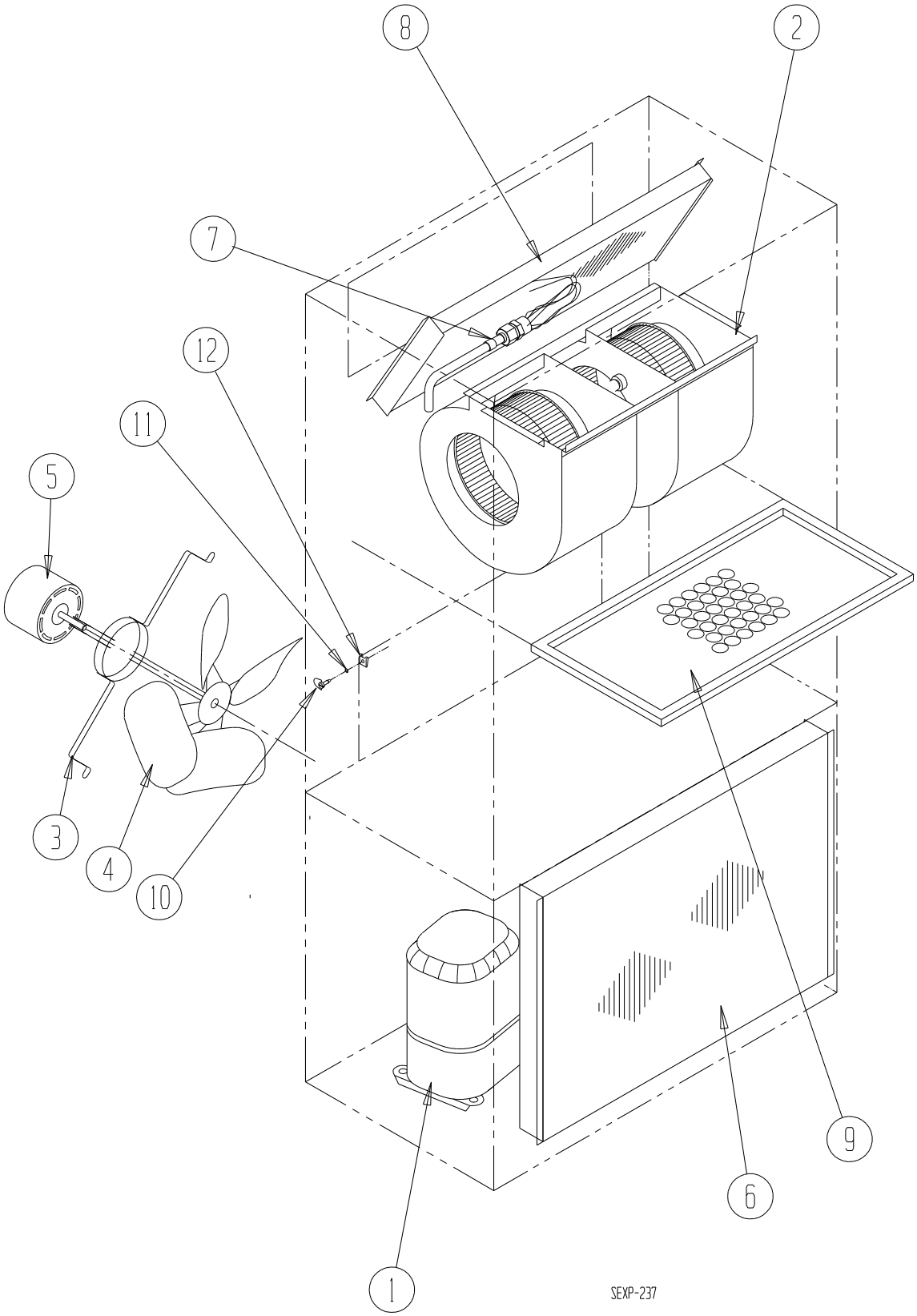
8
2
7
12
11
5
3
4
10
9
6
1
SEXP-237

FUNCTIONAL COMPONENTS

Dwg No.	Part Number	Description	W42L2-A	W42L2-B	W42L2-C	W42L2-F	W48L2-A	W48L2-B	W48L2-C	W48L2-F	W60L2-A	W60L2-B	W60L2-C	W60L2-F
1	8000-318	Compressor	X											
1	8000-319	Compressor		X										
1	8000-320	Compressor			X	X								
1	8000-400	Compressor					X							
1	8000-401	Compressor						X						
1	8000-402	Compressor							X	X				
1	8000-324	Compressor									X			
1	8000-325	Compressor										X		
1	8000-326	Compressor											X	X
2	S900-320	Blower Assembly	X	X		X	X	X		X				
2	S900-321	Blower Assembly			X				X					
2	S900-185	Blower Assembly									X	X		X
2	S900-186	Blower Assembly											X	
3	8200-004	Fan Motor Mount	X	X	X	X	X	X	X	X	X	X	X	X
4	5151-060	Fan Blade	X	X	X	X	X	X	X	X	X	X	X	X
5	8105-030	Condenser Motor			X				X				X	
5	8105-039	Condenser Motor	X	X		X	X	X		X	X	X		X
6	5051-179BX	Condenser Coil	X	X	X	X	X	X	X	X				
6	5051-180BX	Condenser Coil									X	X	X	X
7	800-0420	Distributor Assembly	X	X	X	X								
7	800-0422	Distributor Assembly					X	X	X	X				
7	800-0423	Distributor Assembly									X	X	X	X
8	917-0207BX	Evaporator Coil					X	X	X	X				
8	917-0208BX	Evaporator Coil									X	X	X	X
8	917-0206BX	Evaporator Coil	X	X	X	X								
9	7004-016	Air Filter 1" Throw-Away	X	X	X	X	X	X	X	X	X	X	X	X
9	7003-030	Air Filter 1" Washable	X	X	X	X	X	X	X	X	X	X	X	X
9	7004-027	Air Filter 2" Pleated	X	X	X	X	X	X	X	X	X	X	X	X
10	1171-022	1/4 Turn Fastener	X	X	X	X	X	X	X	X	X	X	X	X
11	1171-024	1/4 Turn Retainer	X	X	X	X	X	X	X	X	X	X	X	X
12	1171-023	1/4 Receptacle	X	X	X	X	X	X	X	X	X	X	X	X
NS	5201-022	Filter Drier	X	X	X	X	X	X	X	X	X	X	X	X
NS	CMA-28	Low Ambient Control ①	X	X	X	X	X	X	X	X	X	X	X	X
NS	1804-0385	High Pressure Switch (Flare)	X	X	X	X	X	X	X	X	X	X	X	X
NS	1804-0386	Low Pressure Switch (Flare)	X	X	X	X	X	X	X	X	X	X	X	X
NS	5451-024	Tubing Isolation Grommet	2	2	2	2	2	2	2	2	2	2	2	2

① Optional on these models.

NS – Not Shown

Dwg No.	Part Number	Description	W70L2-A	W70L2-B	W70L2-C	W70L2-F
1	8000-403	Compressor	X			
1	8000-404	Compressor		X		
1	8000-405	Compressor			X	X
2	S900-185	Blower Assembly	X	X		X
2	S900-186	Blower Assembly			X	
3	8200-049	Fan Motor Mount	X	X	X	X
4	5151-062	Fan Blade	X	X	X	X
5	8106-067	Condenser Motor			X	
5	8106-016	Condenser Motor	X	X		X
6	5051-180BX	Condenser Coil	X	X	X	X
7	800-0425	Distributor Assembly	X	X	X	X
8	917-0209BX	Evaporator Coil	X	X	X	X
9	7004-016	Air Filter 1" Throw-Away	X	X	X	X
9	7003-030	Air Filter 1" Washable	X	X	X	X
9	7004-027	Air Filter 2" Pleated	X	X	X	X
10	1171-022	1/4 Turn Fastener	X	X	X	X
11	1171-024	1/4 Turn Retainer	X	X	X	X
12	1171-023	1/4 Receptacle	X	X	X	X
NS	5201-022	Filter Drier	X	X	X	X
NS	CMA-28	Low Ambient Control (Flare) ①	X	X	X	X
NS	1804-0385	High Pressure Switch (Flare)	X	X	X	X
NS	1804-0386	Low Pressure Switch (Flare)	X	X	X	X
NS	5451-024	Tubing Isolation Grommet	2	2	2	2
NS	CMC-29	Freeze Thermostat Kit	X	X	X	X

① Optional on these models.

NS – Not Shown

CONTROL PANEL

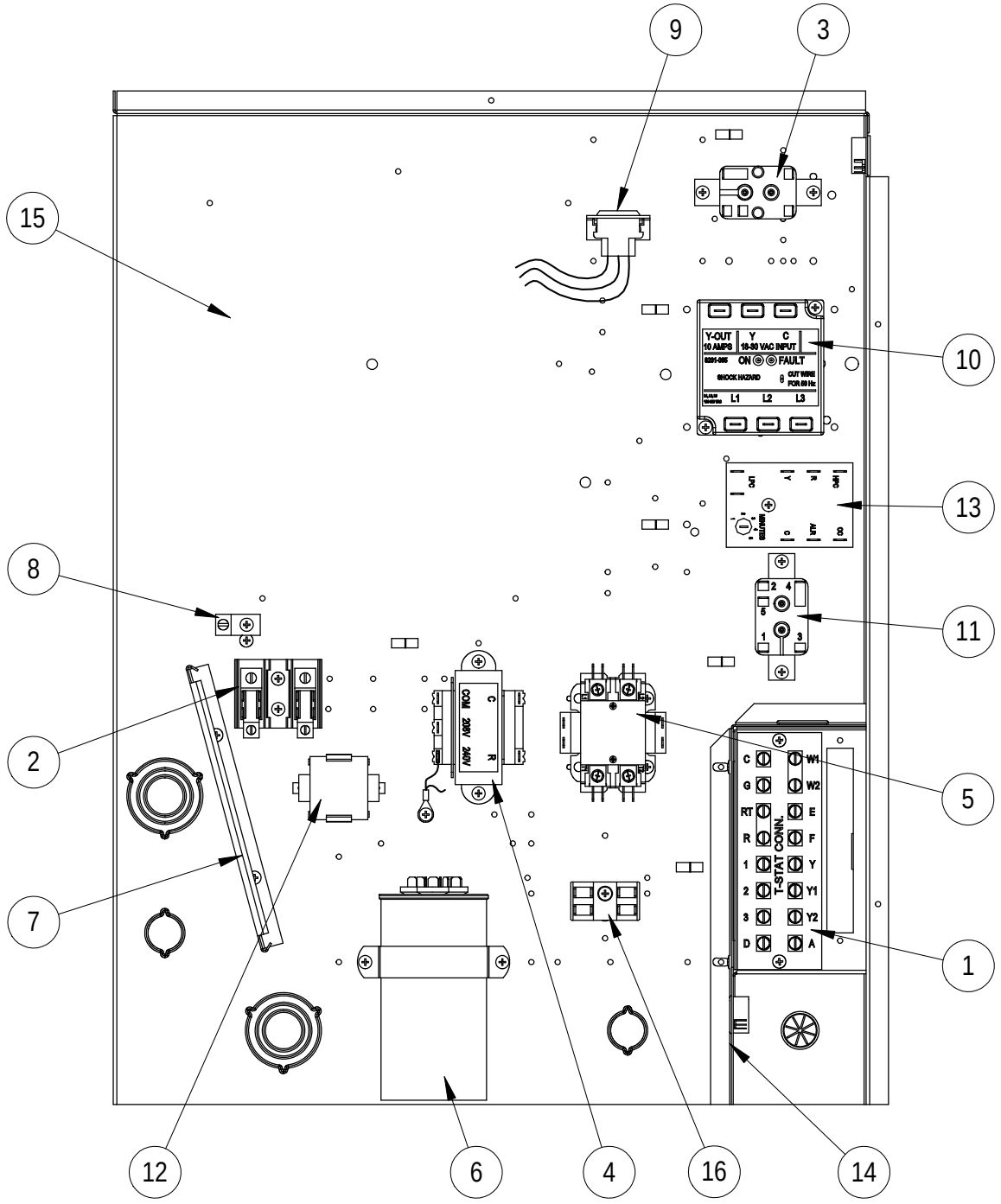

SEXP-662

Dwg No.	Part Number	Description	W42L2-A	W42L2-B	W42L2-C	W42L2-F	W48L2-A	W48L2-B	W48L2-C	W48L2-F	W60L2-A	W60L2-B	W60L2-C	W60L2-F
1	8607-034	Low Voltage Terminal Strip	X	X	X	X	X	X	X	X	X	X	X	X
2	8607-013	Terminal Block 2 Pole	X			2	X			2	X			2
2	8607-014	Terminal Block 3 Pole		X	X			X	X			X	X	
2	8607-015	Phenolic Insulator			X				X				X	
2	134-051	Terminal Block Barrier				2				2				2
3	8201-009	Blower Control Relay	X	X		X	X	X		X	X	X		X
3	8201-032	Blower Control Relay			X				X				X	
4	8407-068	Transformer	X	X		X	X	X		X	X	X		X
4	8407-069	Transformer			X				X				X	
5	8401-002	Compressor Contactor		X	X	X		X	X	X		X	X	X
5	8401-025	Compressor Contactor	X				X				X			
6	8552-079	Compressor Capacitor	X											
6	8552-005	Outdoor Motor Capacitor		X		X		X		X				
6	8552-026	Outdoor Motor Capacitor			X				X				X	
6	8552-059	Compressor Capacitor					X							
6	8552-089	Compressor Capacitor									X			
6	8552-004	Compressor Capacitor										X		X
7	135-130	Wire Shield	X	X	X	X	X	X	X	X	X	X	X	X
8	8611-006	Ground Terminal	X	X	X	X	X	X	X	X	X	X	X	X
9	3000-978	6 Pin Connector	X	X	X	X	X	X	X	X	X	X	X	X
10	8201-126	Phase Monitor		X	X	X		X	X	X		X	X	X
11	8201-062	Alarm Relay	X	X	X	X	X	X	X	X	X	X	X	X
12	8551-004	Start Device (PTCR) ①	X				X				X			
13	8201-164	Compressor Control Module	X	X	X	X	X	X	X	X	X	X	X	X
14	117Y333	Low Voltage Box	X	X	X	X	X	X	X	X	X	X	X	X
15	117Y340	Control Panel	X	X	X	X	X	X	X	X	X	X	X	X
16	8607-017	Terminal Block ①	X	X	X	X	X	X	X	X	X	X	X	X
NS	8615-040	Circuit Breaker 50A 2 Pole ②	X				X							
NS	8615-042	Circuit Breaker 35A 3 Pole ②		X				X						
NS	8615-067	Toggle Disconnect ②			X	X			X	X			X	X
NS	8615-044	Circuit Breaker 45A 3 Pole ②										X		
NS	8615-041	Circuit Breaker 60A 2 Pole ②									X			
NS	4095-163	Wiring Diagram	X				X				X			
NS	4095-255	Wiring Diagram		X				X				X		
NS	4095-357	Wiring Diagram			X				X				X	
NS	4095-635	Wiring Diagram				X				X				X

① Optional on these models.

② Circuit breakers listed are for units without electric heat "OZ" models. See heater replacement parts manual for units with electric heat.

NS – Not Shown

CONTROL PANEL

Dwg No.	Part Number	Description	W70L2-A	W70L2-B	W70L2-C	W70L2-F
1	8607-034	Low Voltage Terminal Strip	X	X	X	X
2	8607-013	Terminal Block 2 Pole	X			2
2	8607-014	Terminal Block 3 Pole		X	X	
2	8607-015	Phenolic Insulator			X	
3	8201-009	Blower Control Relay	X	X		X
3	8201-032	Blower Control Relay			X	
4	8407-068	Transformer	X	X		X
4	8407-069	Transformer			X	
5	8401-002	Compressor Contactor		X	X	X
5	8401-025	Compressor Contactor	X			
6	8552-005	Outdoor Motor Capacitor			X	X
6	8552-082	Compressor Capacitor	X			
6	8552-004	Compressor Capacitor		X		
7	135-130	Wire Shield	X	X	X	X
8	8611-006	Ground Terminal	X	X	X	X
9	3000-1017	6 Pin Connector	X	X	X	X
10	8201-126	Phase Monitor		X	X	X
11	8201-062	Alarm Relay ①	X	X	X	X
12	8551-004	Start Device (PTCR) ①	X			
13	8201-164	Compressor Control Module	X	X	X	X
14	117Y333	Low Voltage Box	X	X	X	X
15	117Y340	Control Panel	X	X	X	X
16	8607-017	Terminal Block ①	X	X	X	X
NS	8615-067	Toggle Disconnect ②			X	X
NS	8615-045	Circuit Breaker 50A 3 Pole ②		X		
NS	8615-041	Circuit Breaker 60A 2 Pole ②	X			
NS	4095-165	Wiring Diagram	X			
NS	4095-257	Wiring Diagram		X		
NS	4095-358	Wiring Diagram			X	
NS	4095-259	Wiring Diagram				X

① Optional on these models.

② Circuit breakers listed are for units without electric heat "OZ" models. See heater replacement parts manual for units with electric heat.

NS – Not Shown

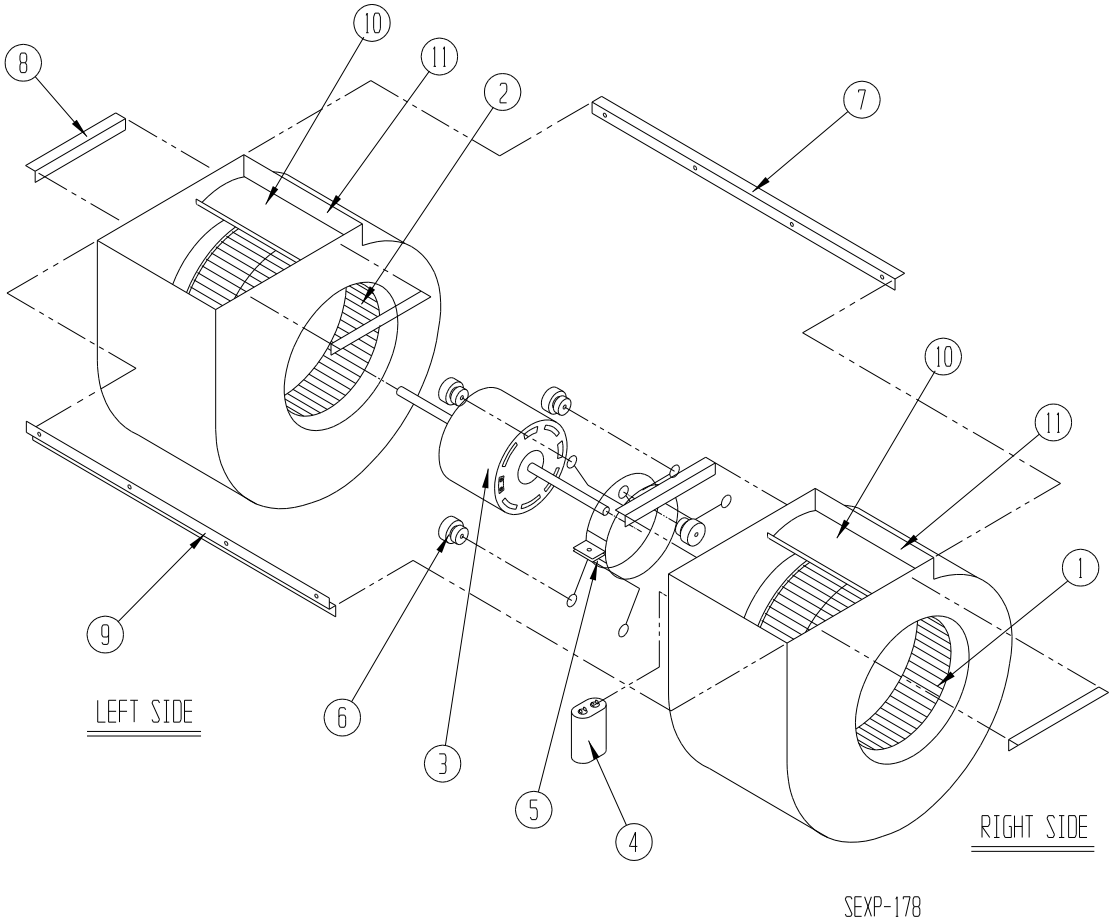

Dwg No.	Part Number	Description	900-320	900-321	900-185	900-186
1	5152-011	10 Inch Wheel (CW)			X	X
1	5152-057	9 Inch Wheel (CW)	X	X		
2	5152-012	10 Inch Wheel (CW)			X	X
2	5152-058	9 Inch Wheel (CW)	X	X		
3	8105-061	Blower Motor (230/208)	X			
3	8105-062	Blower Motor (460)		X		
3	8106-046	Blower Motor (230/208)			X	
3	8106-025	Blower Motor (460)				X
4	8552-091	Capacitor	X	X		
4	8552-005	Capacitor			X	X
5	8200-040	Motor Mount	X	X	X	X
6	5451-011	Grommets	6	6	6	6
7	105-881	Back Brace	X	X	X	X
8	105-880	Side Angle	4	4	4	4
9	103-389	Front Brace	X	X	X	X
10	151-101	Housing	2	2	2	2
11	144-166	Diffuser	2	2	2	2

Supplemental Instructions

S8201-164 Compressor Control Module

(Replaces 8201-088, 8201-148, 8201-157, 8201-162, 8620-244)

Features

Delay-on-Make Timer
Short Cycle Protection/Delay-on-Break
Low Pressure Detection
High Pressure Detection
HPC and LPC Status LEDs
Test Mode
Brownout Protection with Adjustment

Delay-on-Make Timer

A delay-on-make timer is included to be able to delay startup of the compressor. This is desired when more than one unit is on a structure so that all of the units do not start at the same time which could happen after a power loss or building shutdown. The delay-on-make time period is 2 minutes plus 10% of the delay-on-break time period. To ensure that all of the units do not start at the same time, adjust the delay-on-break timer on each unit to a slightly different delay time.

Short Cycle Protection/Delay-on-Break

An anti-short cycle timer is included to prevent short cycling the compressor. This is adjustable from 30 seconds to 5 minutes via the adjustment knob. Once a compressor call is lost, the time period must expire before a new call will be initiated.

Low Pressure Detection

Low pressure switch monitoring allows for a lockout condition in a situation where the switch is open. If the low pressure switch remains open for more than 2 minutes. the compressor control module (CCM) will de-energize the compressor for the delay-on-break time. If the switch closes again, it will then restart the compressor. If the switch trips again during the same Y call, the compressor will be de-energized and the alarm terminal will be energized indicating an alarm. The blue LED will light and stay on until power is cycled to the control or a loss of voltage is present at Y terminal for more than ½ second.

High Pressure Detection

High pressure switch monitoring allows for a lockout condition in a situation where the switch is open. If the high pressure switch opens, the CCM will de-energize the compressor. If the switch closes again, it will then restart the compressor after the delay-on-break setting has expired on the device. If the switch trips again during the same thermostat call, the compressor will be de-energized and the alarm terminal will be energized indicating an alarm. The red LED will light and stay on until power is cycled to the control or a loss of voltage is present at Y terminal for more than ½ second.

Test Mode

By rapidly rotating the potentiometer (POT) clockwise (see Figure 1 on page 2), all timing functions will be removed for testing.

The conditions needed for the unit to enter test mode are as follows: POT must start at a time less than or equal to the 40 second mark. The POT must then be rapidly rotated to a position greater than or equal to the 280 second mark in less than ¼ second. Normal operation will resume after power on reset or after the unit has been in test mode for at least 5 minutes.

Bard SINCE 1914
Climate Control Solutions

Bard Manufacturing Company, Inc.
Bryan, Ohio 43506
www.bardhvac.com

Manual: 7960-805
Supersedes: ***NEW***
Date: 3-13-18

Brownout Protection with Adjustment

Brownout protection may be necessary if the utility power or generator power has inadequate power to prevent the voltage from dropping when the compressor starts. This is rare but can happen if the generator is undersized at the site or if the site is in a remote location far from the main power grid. Under normal circumstances, allowing the brownout to be ignored for a time period should not be needed. The 8201-164 is shipped in “0” do not ignore position.

If ignoring the brownout is needed because of the above conditions, three preset timers can be set by DIP switches in order to delay signaling a power brownout for a specific length of time after compressor contactor is energized. This allows the compressor a time period to start even if the voltage has dropped and allows the voltage to recover. This delay only happens when the CC terminal energizes. The delay can be set to 500, 1000 or 1500 milliseconds; time is not cumulative—only the longest setting will apply. If the voltage recovers during the brownout time period, the compressor will start.

If the voltage doesn’t recover during the time period, the blue LED will flash. A flashing blue LED indicates that a brownout condition was sensed; the control will continue to flash the blue LED until the Y call has been satisfied. The compressor will not start if the blue LED is flashing.

If user chooses the “0” do not ignore position when the site has inadequate utility or generator power, this could lead to the compressor never starting. The control will see the brownout immediately and not start.

A common scenario and one that has been seen in the field is when a unit or units switches from utility power to generator power. With slower transfer switches, the time delay between the utility power and generator power didn’t cause a problem. The units lost power, shut off and came back on line normally. With the introduction of almost instantaneous transfer switches, the millisecond long power glitch can be enough that the compressor will start to run backwards. In this scenario, the CCM will catch this and restart the units normally.

FIGURE 1
S8201-164 Compressor Control Module

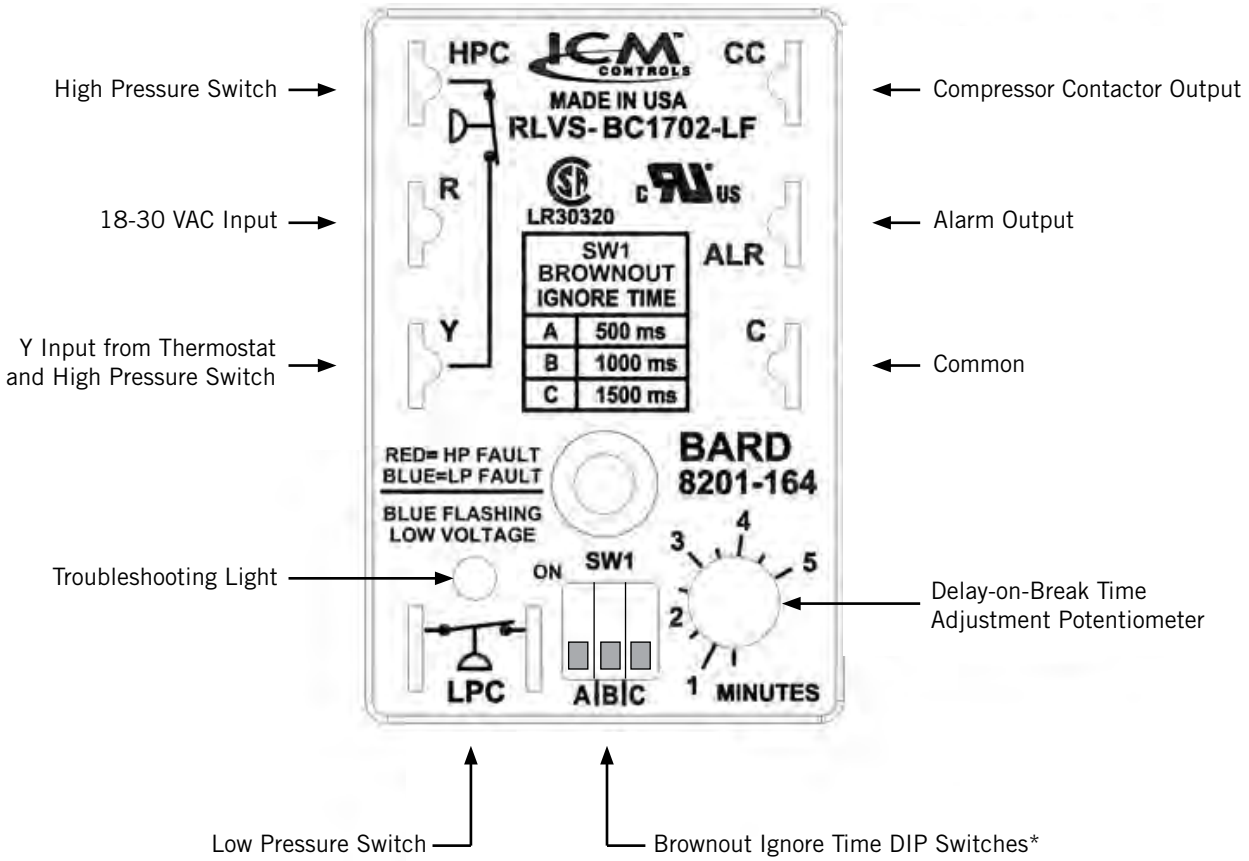

* Turn on only one switch for that specific ignore time setting

Climate Control Solutions

Limited Warranty

For units applied within the United States, Puerto Rico, US Virgin Islands, Guam, Canada and Mexico

Limited Warranty To Original Purchaser:
Bard Manufacturing Company, Inc. Bryan, Ohio 43506 warrants to you, the original purchaser, that your Bard product will be free from defects in materials and workmanship when used under normal conditions from the installation date through the time periods outlined in the "Duration of Warranty" section (see reverse side).

Proof Of Purchase:
You must be able to show us the date on which you purchased your product when you make a claim under this warranty. Your owner's registration card filed online at www.wallmountwarranty.com or your contractor's invoice, bill of sale, or similar document is sufficient at time of warranty claim. If you can not show us the actual date of purchase, the time periods in this warranty will start on the date that we shipped your Bard product from our factory.

What This Warranty Does Not Cover: (Also see Duration of Warranty on reverse side.)
This warranty does not cover defects or damage caused by:

1. Alterations not approved by us; improper installation (including over or under sizing), improper repairs, or servicing; or improper parts and accessories not supplied by us.
2. Misuse or failure to follow installation and operating instructions (including failure to perform preventative maintenance) or limitations on the rating plate. This includes failure to use low ambient controls on all applications requiring compressor operation in cooling mode below 60F outdoor ambient.
3. Any corrosion from operation in a corrosive atmosphere (examples: acids, halogenated hydrocarbons or environmental conditions).
4. Parts that must be replaced periodically (such as filters, oil nozzles, mist eliminators, ERV belts, pile seals, etc.).
5. Improper fuel or electrical supply (such as low voltage, voltage transients, power interruption, and units on generators with no brownout protection).
6. Accidents or other events beyond our reasonable control (such as storm, fire, or transportation damage).
7. Defects that happen after
   (a) Anyone has tampered with the product.
   (b) The product has been improperly serviced according to accepted trade practices;
   (c) The product has been moved from its original place of installation; or,
   (d) The product has been damaged by an event beyond Bard's control (See also No. 5 above).
8. Consequential damages (such as increased living expenses while the product is being repaired). Some states do not allow the exclusion or limitation of incidental or consequential damages, so the above limitation or exclusion may not apply to you.
9. This warranty has certain limitations for units installed on over-the-road trucks, vans and trailers. (See reverse side.)
10. Cost of service call at installation site to diagnose causes of trouble, labor to replace defective component or transportation costs for replacement parts.
11. This Limited Warranty does not apply to products installed or operated outside of the US, Puerto Rico, US Virgin Islands, Guam, Canda and Mexico. Units operated in coastal areas where the operating environment is exposed to airborne saline particles (typically 5 miles from coast line) must have corrosion protection or warrenty claims will be declined on corrosion-based cabinet and part failures.
12. Bard does not endorse, approve or certify any online sales of its products through auction websites, online retailers, liquidators or any other method of online sales direct to consumers. Bard will not honor the factory warranty of any Bard equipment purchased over the Internet.

Your Responsibilities:
You are responsible for -

1. Preventative maintenance of the product (such as cleaning and replacement of filters, nozzles and other consumable parts).
2. Insuring that the instruction manual is followed for care and use of your product.
3. Insuring that your product is installed by a competent, qualified contractor, following all local and national codes, and industry standards.

What We Will Do About A Defect:
We will either repair or replace the defective part only. Replacement parts may be reconditioned parts. The warranty for the repaired or replaced part will last only for the remainder of the warranty period for the original part. For Heat Exchangers that are no longer available, we will give you credit equal to the then current retail price of an equivalent Heat Exchanger.

Defective parts and a properly completed Bard parts warranty form must be returned to a Bard distributor for submitting to Bard to be eligible for a warranty credit or replacement. Credits are issued to the Bard distributor.

We will not pay or be responsible for labor or defective/replacement part transportation costs or delays in repairing or failures to complete repairs caused by events beyond our reasonable control.

What You Must Do

1. Tell your heating and air conditioning contractor as soon as you discover a problem and have the contractor make repairs.
2. Pay for all transportation, related service labor, diagnostic charges, refrigerant, refrigerant recovery and related items.

Service
If your product requires service, you should contact the contractor who installed it or the contractor that has been providing the product's preventative maintenance and repair service. You may find the installing contractor's name on the product or in your Owner's packet. If you do not know who that is, you should contact a competent, qualified contractor to make the repairs. If in doubt, you should contact the nearest distributor that handles Bard products (www.bardhvac.com). Please note that contractors and distributors that handle Bard products are independent contractors and distributors, and therefore, are not under the direction of Bard Manufacturing Company, Inc.

Only Warranty
This is the only warranty that we make. There are no other express warranties. All implied warranties are limited in duration to the duration of the applicable written warranty made above.
Some states do not allow limitations on how long an implied warranty lasts, so the above limitation or exclusion may not apply to you.

Other Rights
This warranty gives you specific legal rights and you may have other rights which vary from state to state.

Duration Of Warranty is limited to defects arising during the periods shown in the following table:

Model Number Series: Includes all Models in each Series & which may have additional characters. (Example: W12-70A includes W36A w/additional characters.)	— Number of Years from Installation Date ① —			
	Compressor ⑤	Sealed System Components ②⑤⑦	All Other Functional Parts ③	Heat Exchangers
AIR CONDITIONERS W12A, W17A, W18A, W24A, W30A, W36A, W42A, W48A, W60A, W70A, W72A, W17L, W18L, W24L, W30L, W36L, W42L, W48L, W60L, W70L, W72L, WA3S, WA4S, WA5S, WL3S, W4LS, WL5S, D25A, D28A, D35A, D36A, D42A, D48A, D60A, D25L, D28L, D35L, D36L, D42L, D48L, D60L, Q24A, Q30A, Q36A, Q42A, Q48A, Q60A, I30A, I36A, I42A, I60A	5	5	5	N/A
AIR SOURCE HEAT PUMPS W18H, W24H, W30H, W36H, W42H, W48H, W60H, C24H, C30H, C36H, C42H, C48H, C60H, T24H, T30H, T36H, T42H, T48H, T60H, T24S, T30S, T36S, T42S, T48S, T60S, Q24H, Q30H, Q36H, Q42H, Q43H, Q48H, Q60H, I30H, I36H, I42H, I48H, I60H, I36Z, I48Z, I60Z	5	5	5	N/A
ENVIRONMENTAL CONTROL UNITS W3RV, W4RV, W5RV, W6RV, W3LV, W4LV, W5LV, W6LV	5	5	1	N/A
EQUIPMENT SHELTER UNITS W**A2P, W**AAP, WR**, D**AAP, HR**, H12A, H72A	5	5	1	N/A
GEOTHERMAL/WATER SOURCE HEAT PUMPS QW2S, QW3S, QW4S, QW5S	5	5	5	N/A
CHILLED WATER QC50 (No Compressor)	N/A	5	5	N/A
GAS/ELECTRIC WALL-MOUNT W24G, W30G, W36G, W42G, W48G, W60G, WG3S, WG4S, WG5S	5	5	5	10
OIL FURNACES				
ECM "V" Blower Models FC085, FH085, FH110, FLF075, FLF110, FLR075, FLR100, FLR130	N/A	N/A	10 ⑥	LIFETIME ④
PSC "D" Blower Models FC085, FH085D, FH110D, FLF085, FLF110, FLR085, FLR110, FLR140	N/A	N/A	5	LIFETIME ④
SOF: SOF175, SOF265	N/A	N/A	1	10
ACCESSORIES				
Factory/Field Installed Bard Ventilation and Heater Packages	N/A	N/A	5	N/A
Bard branded Thermostats/Temperature Controllers	N/A	N/A	5	N/A
LC1000, LC1500, LC2000, LC5000, LC6000, LV1000, MC4002, DC3003, TEC40, BG1000	N/A	N/A	1	N/A
Humidistats, CO_2 Controllers and all other field installed accessories not listed separately	N/A	N/A	1	N/A

① For equipment that did not have the warranty registration card returned to the factory, the warranty period starts when the product was shipped from the factory or online.

② Heat transfer coils (refrigerant to air coils for air source and coaxial coils for water source units) are covered for leaks for 5 years. Physical damage to air side coils resulting in leaks or insufficient airflow, or fin deterioration due to corrosive atmosphere (such as acids, halogenated hydrocarbons or coastal environmental conditions) are not covered. Leaks in coaxial coils due to freezing of the coils are not covered. Copper coaxial coils for QW are not warranted for ground water/open loop installations.

③ Functional parts warranty is 1-year for all telecommunication, electric switch stations, pump stations and similar applications. This also applies to all OTR (over the road) applications.

④ Limited lifetime warranty on Heat Exchangers applies to original purchaser in private, owner occupied residences. Subsequent owners and commercial uses are warranted for 20 years from date of installation.

⑤ All OTR (over the road) applications that are moved from one location to another:
Factory Warranty applies up to the point of initial start-up and test at all OEM manufacturing locations or subsequent outfitting facility. Once it goes into OTR service, the warranty expires immediately for compressor and sealed system components. This OTR exemption does not apply to relocatable classrooms, construction or office trailers.

⑥ Standard warranty for non-registered Oil Furnaces is 5-year parts. Must be registered at www.wallmountwarranty.com within 90 days of installation for the 10-year parts coverage to be in effect.

⑦ Factory coated coils have a "5" year warranty in corrosive environments that are listed as approved.

Internet Resources

Recognized as a leader in the HVAC industry, Bard combines quality products and outstanding service with innovation and technological advances to deliver high-performance heating and cooling products around the world. Please visit www.bardhvac.com ***for additional information regarding warranty and product information.***